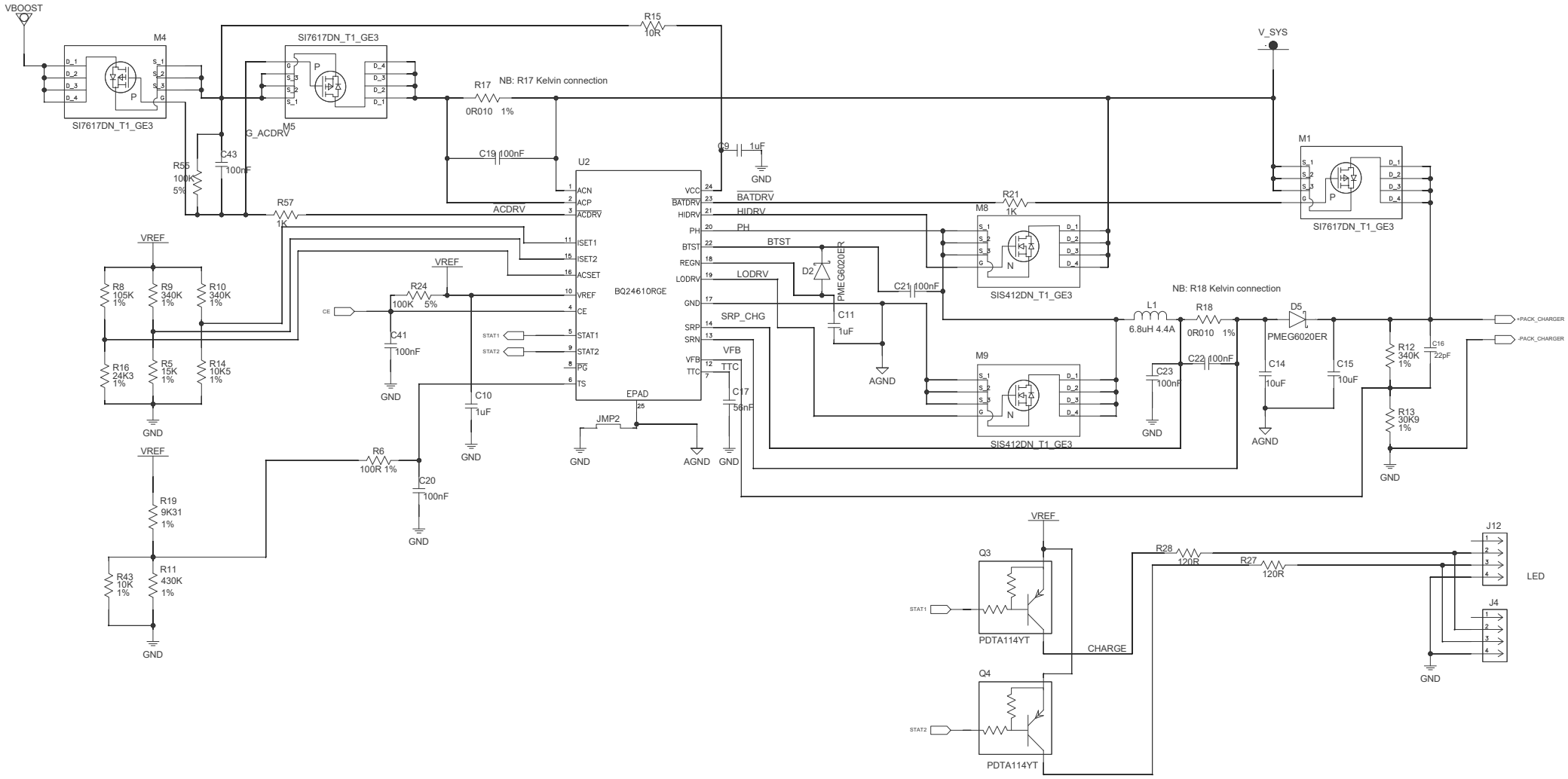
VBOOST
M4
SI7617DN_T1_GE3
SI7617DN_T1_GE3
M5
G_ACDRV
R15
10R
R17
0R010 1%
NB: R17 Kelvin connection
C19 100nF
C9 1uF
GND
U2
BQ24610RGE
ACN
ACP
ACDRV
ISET1
ISET2
ACSET
VREF
CE
STAT1
STAT2
PG
TS
EPAD
VCC
BATDRV
HIDRV
PH
BTST
REGN
LODRV
GND
SRP
SRN
VFB
TTC
BATDRV
HIDRV
PH
BTST
LODRV
SRP_CHG
VFB
TTC
D2
PMEG6020ER
C11
1uF
C21 100nF
R21
1K
M8
SIS412DN_T1_GE3
M9
SIS412DN_T1_GE3
M1
SI7617DN_T1_GE3
V_SYS
R55
100K
5%
C43
100nF
R57
1K
VREF
R8
105K
1%
R9
340K
1%
R10
340K
1%
R16
24K3
1%
R5
15K
1%
R14
10K5
1%
R24
100K 5%
C41
100nF
C10
1uF
JMP2
AGND
C17
56nF
R6
100R 1%
C20
100nF
R19
9K31
1%
R43
10K
1%
R11
430K
1%
NB: R18 Kelvin connection
L1
6.8uH 4.4A
R18
0R010 1%
D5
PMEG6020ER
C23
100nF
C22 100nF
C14
10uF
C15
10uF
R12
340K
1%
C16
22pF
R13
30K9
1%
+PACK_CHARGER
-PACK_CHARGER
Q3
PDTA114YT
Q4
PDTA114YT
CHARGE
R28
120R
R27
120R
J12
J4
LED

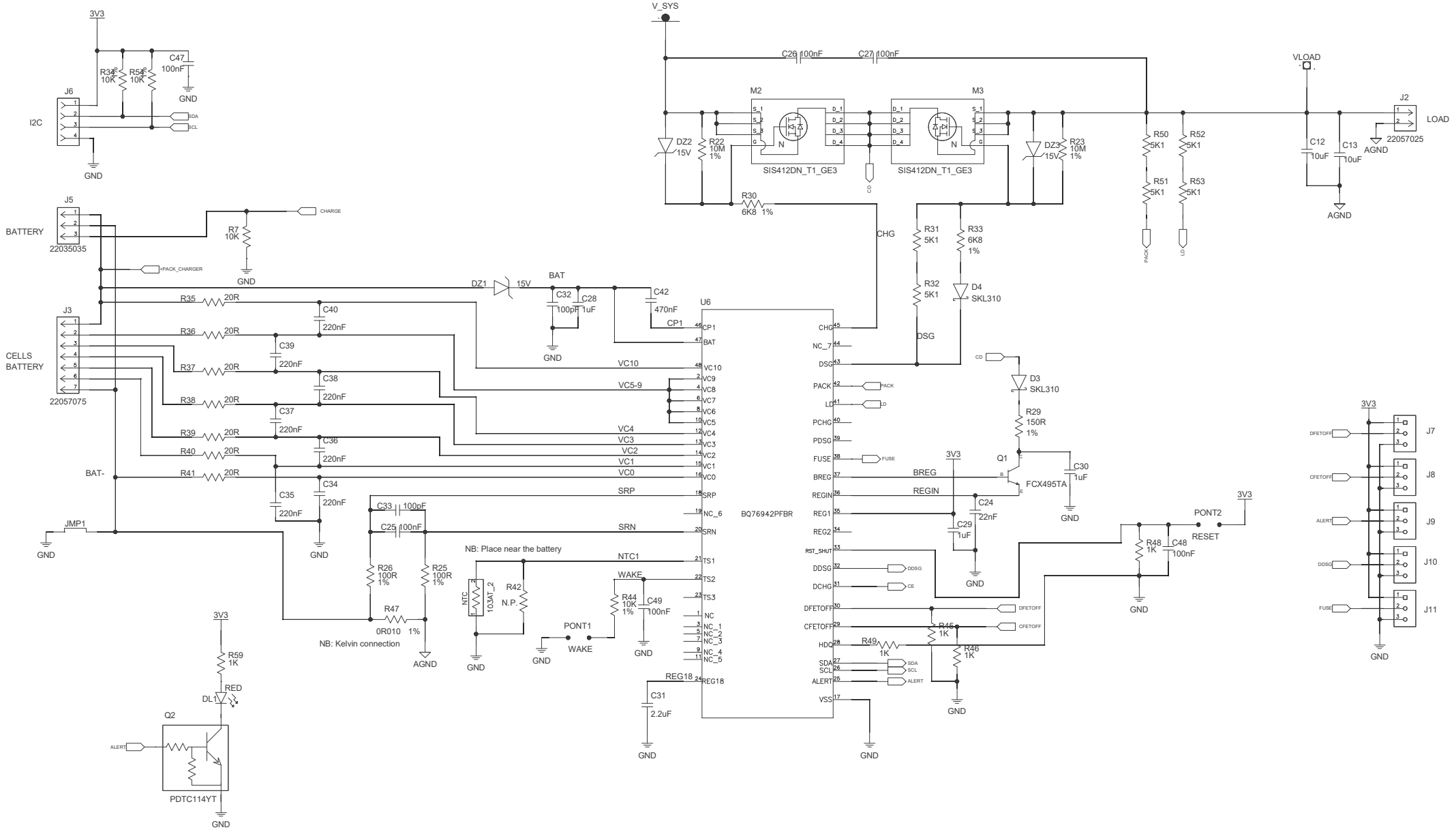
3V3
C47
100nF
GND
R34
10K
R54
10K
J6
I2C
SDA
SCL
GND
V_SYS
C26 100nF
C27 100nF
VLOAD
M2
M3
J2
LOAD
22057025
AGND
DZ2
15V
R22
10M
1%
SIS412DN_T1_GE3
SIS412DN_T1_GE3
DZ3
15V
R23
10M
1%
R50
5K1
R52
5K1
R51
5K1
R53
5K1
C12
10uF
C13
10uF
AGND
CD
PACK
LD
R30
6K8 1%
CHG
R31
5K1
R33
6K8
1%
R32
5K1
D4
SKL310
DSG
J5
BATTERY
22035035
CHARGE
R7
10K
GND
+PACK_CHARGER
DZ1
15V
BAT
C32
100pF
C28
1uF
C42
470nF
U6
CP1
J3
CELLS
BATTERY
22057075
R35 20R
R36 20R
R37 20R
R38 20R
R39 20R
R40 20R
R41 20R
C40
220nF
C39
220nF
C38
220nF
C37
220nF
C36
220nF
C34
220nF
C35
220nF
VC10
VC5-9
VC4
VC3
VC2
VC1
VC0
SRP
SRN
NTC1
WAKE
REG18
BAT-
JMP1
GND
C33 100pF
C25 100nF
R26
100R
1%
R25
100R
1%
R47
0R010 1%
NB: Kelvin connection
AGND
NB: Place near the battery
NTC
103AT_2
R42
N.P.
R44
10K
1%
C49
100nF
PONT1
WAKE
C31
2.2uF
BQ76942PFBR
CHG
NC_7
DSG
PACK
LD
PCHG
PDSG
FUSE
BREG
REGIN
REG1
REG2
RST_SHUT
DDSG
DCHG
DFETOFF
CFETOFF
HDQ
SDA
SCL
ALERT
VSS
NC_6
NC
NC_1
NC_2
NC_3
NC_4
NC_5
TS1
TS2
TS3
D3
SKL310
R29
150R
1%
Q1
FCX495TA
C30
1uF
C24
22nF
C29
1uF
R49
1K
R45
1K
R46
1K
R48
1K
C48
100nF
PONT2
RESET
J7
J8
J9
J10
J11
DFETOFF
CFETOFF
ALERT
DDSG
FUSE
R59
1K
RED
DL1
Q2
PDTC114YT