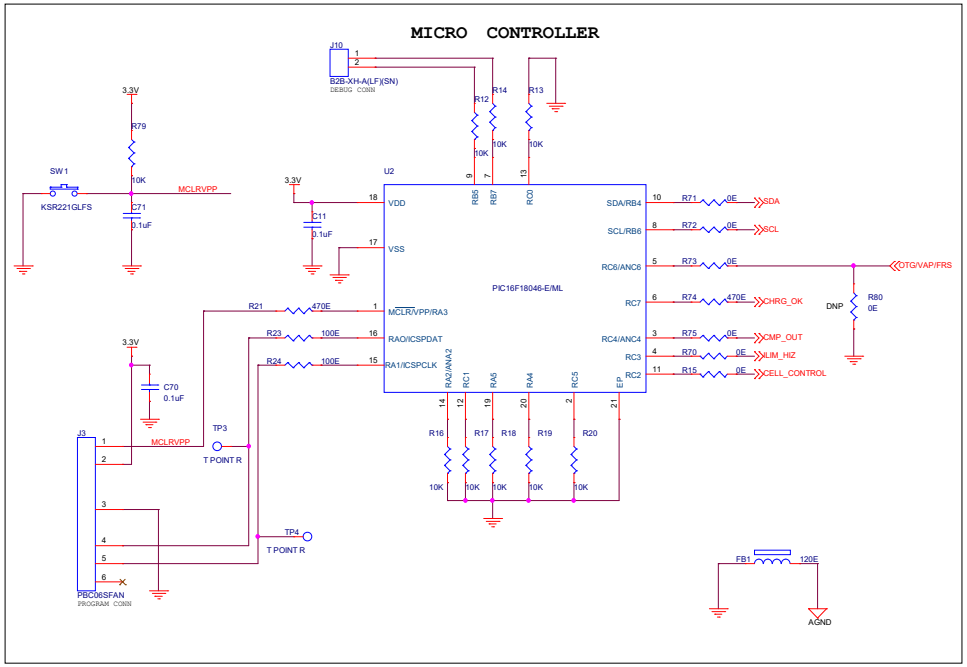

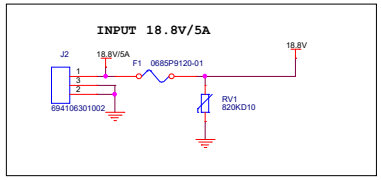

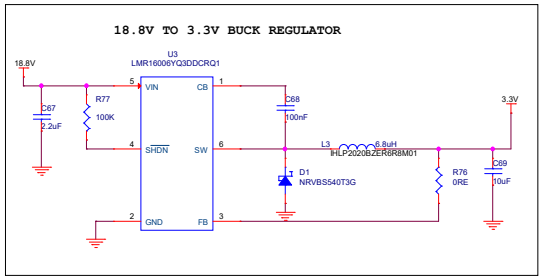

Title	4S6P BATTERY CHARGER(100W)	
Size C	Document Number <Doc>	Rev 0.2
Date: Monday, July 22, 2024	Sheet 2 of 2	

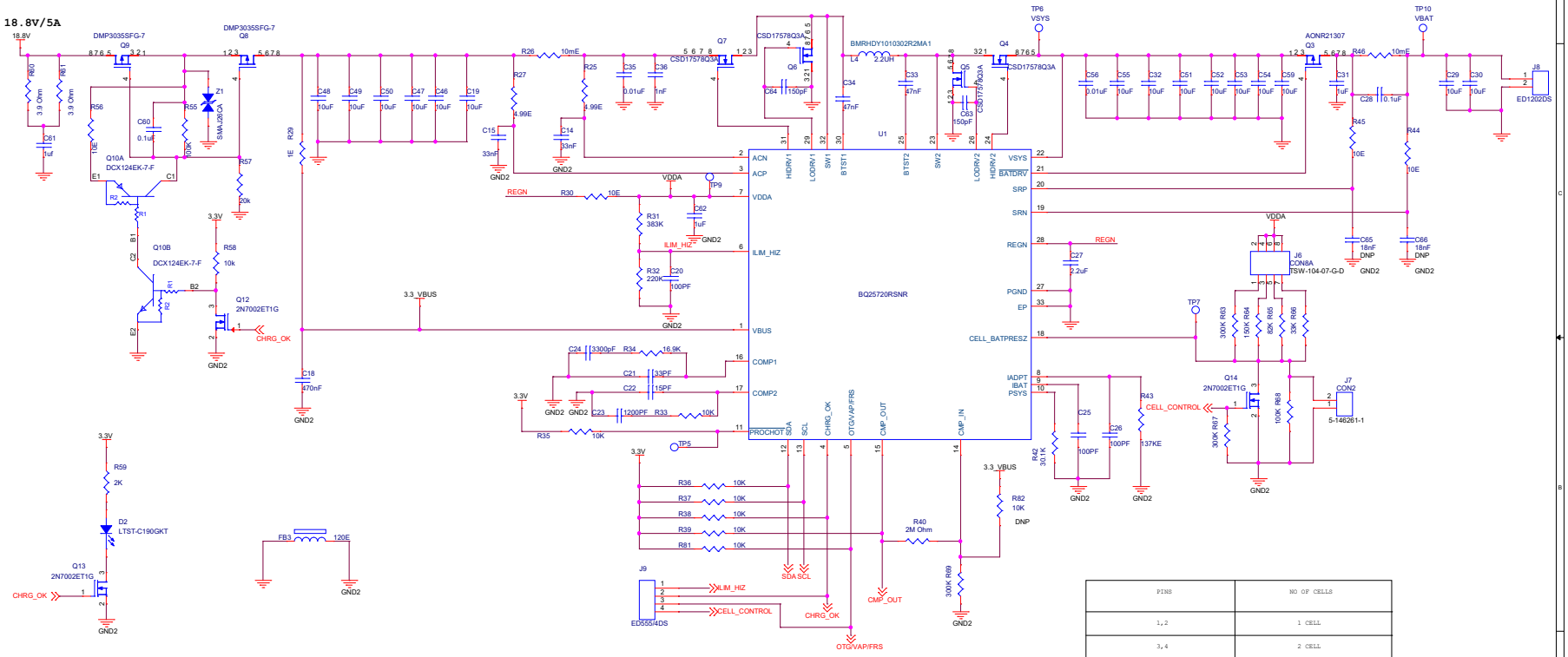

PINS	NO OF CELLS
1,2	1 CELL
3,4	2 CELL
5,6	3 CELL
7,8	4 CELL

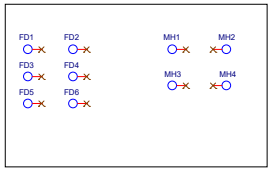

Title	4S6P BATTERY CHARGER(100W)
Size C	Document Number <Doc>
Rev 0.2	
Date: Monday, July 22, 2024	Sheet 2 of 2