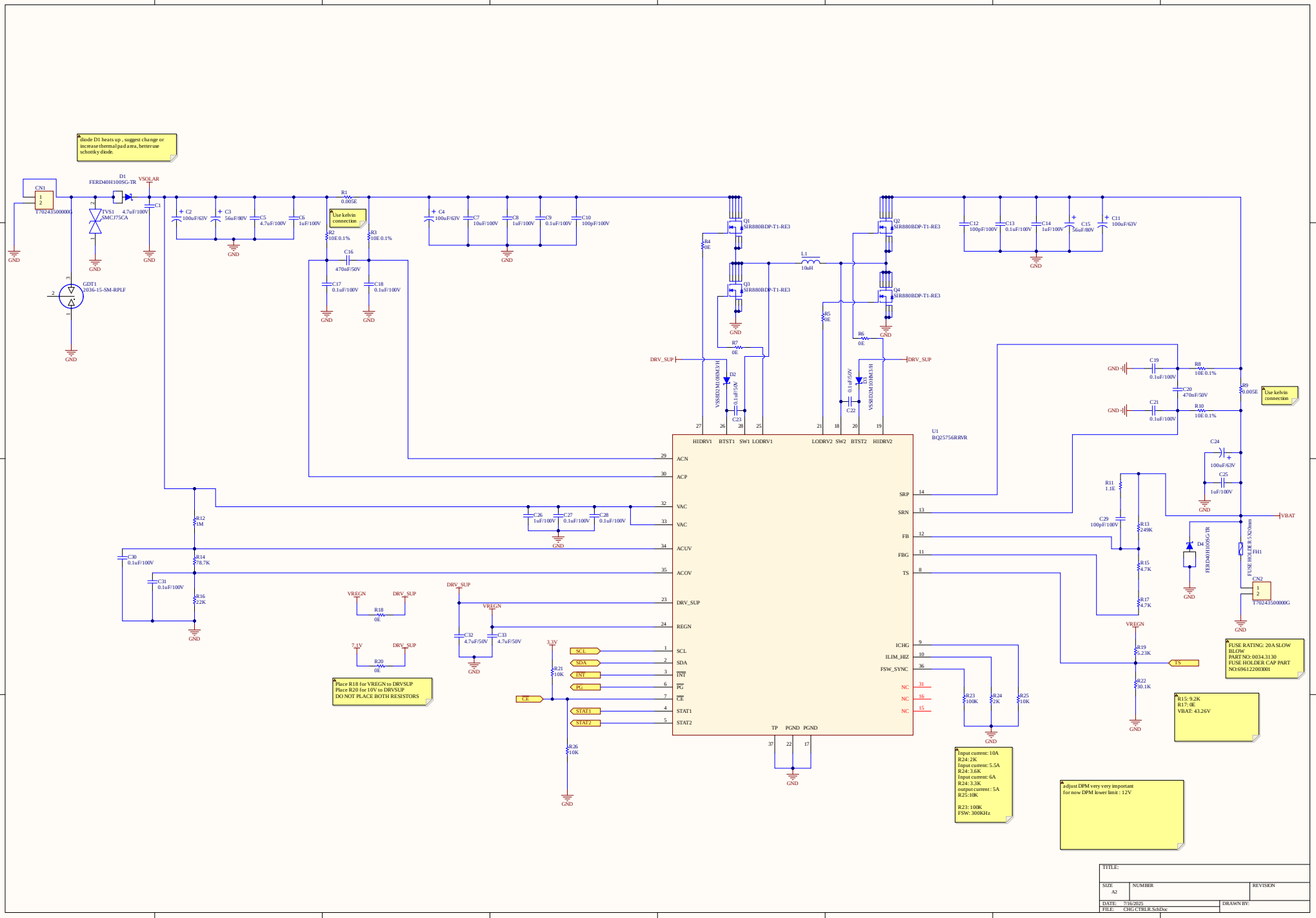
diode D1 heats up , suggest change or increase thermal pad area, better use schottky diode.
CN1
1
2
1702435000000
D1
FERD40H100SG-TR
VSOLAR
TVS1
SMCJ75CA
4.7uF/100V
C1
GDT1
2036-15-SM-RPLF
C2
100uF/63V
C3
56uF/80V
C5
4.7uF/100V
C6
1uF/100V
R1
0.005E
Use kelvin connection
R2
10E 0.1%
R3
10E 0.1%
C16
470nF/50V
C17
0.1uF/100V
C18
0.1uF/100V
C4
100uF/63V
C7
10uF/100V
C8
1uF/100V
C9
0.1uF/100V
C10
100pF/100V
Q1
SIR880BDP-T1-RE3
Q2
SIR880BDP-T1-RE3
Q3
SIR880BDP-T1-RE3
Q4
SIR880BDP-T1-RE3
R4
0E
L1
10uH
R5
0E
R6
0E
R7
0E
DRV_SUP
VSS8D2M10HM3/H
D2
0.1uF/50V
C23
0.1uF/50V
D3
VSS8D2M10HM3/H
C22
C12
100pF/100V
C13
0.1uF/100V
C14
1uF/100V
C15
56uF/80V
C11
100uF/63V
C19
0.1uF/100V
C20
470nF/50V
C21
0.1uF/100V
R8
10E 0.1%
R10
10E 0.1%
R9
0.005E
Use kelvin connection
U1
BQ25756RRVR
HIDRV1 BTST1 SW1 LODRV1 LODRV2 SW2 BTST2 HIDRV2
ACN
ACP
VAC
VAC
ACUV
ACOV
DRV_SUP
REGN
SCL
SDA
INT
PG
CE
STAT1
STAT2
TP PGND PGND
SRP
SRN
FB
FBG
TS
ICHG
ILIM_HIZ
FSW_SYNC
NC
NC
NC
C24
100uF/63V
C25
1uF/100V
R11
1.1E
C29
100pF/100V
R13
249K
R15
4.7K
R17
4.7K
R19
5.23K
R22
30.1K
VBAT
D4
FERD40H100SG-TR
FH1
FUSE HOLDER R/S 20mm
CN2
1
2
1702435000000
FUSE RATING: 20A SLOW BLOW
PART NO: 0034.3130
FUSE HOLDER CAP PART NO:696122003001
R15: 9.2K
R17: 0E
VBAT: 43.26V
R12
1M
R14
28.7K
R16
22K
C30
0.1uF/100V
C31
0.1uF/100V
C26
1uF/100V
C27
0.1uF/100V
C28
0.1uF/100V
VREGN
R18
0E
7.1V
R20
0E
C32
4.7uF/50V
C33
4.7uF/50V
3.3V
R21
10K
R26
10K
R23
100K
R24
2K
R25
10K
Place R18 for VREGN to DRVSUP
Place R20 for 10V to DRVSUP
DO NOT PLACE BOTH RESISTORS
Input current: 10A
R24: 2K
Input current: 5.5A
R24: 3.6K
Input current: 6A
R24: 3.3K
output current : 5A
R25:10K
R23: 100K
FSW: 300KHz
adjust DPM very very important
for now DPM lower limit : 12V
GND
TITLE:
SIZE
A2
NUMBER
REVISION
DATE: 7/16/2025
DRAWN BY:
FILE: CHG CTRLR.SchDoc