5V 8A Buck Converter
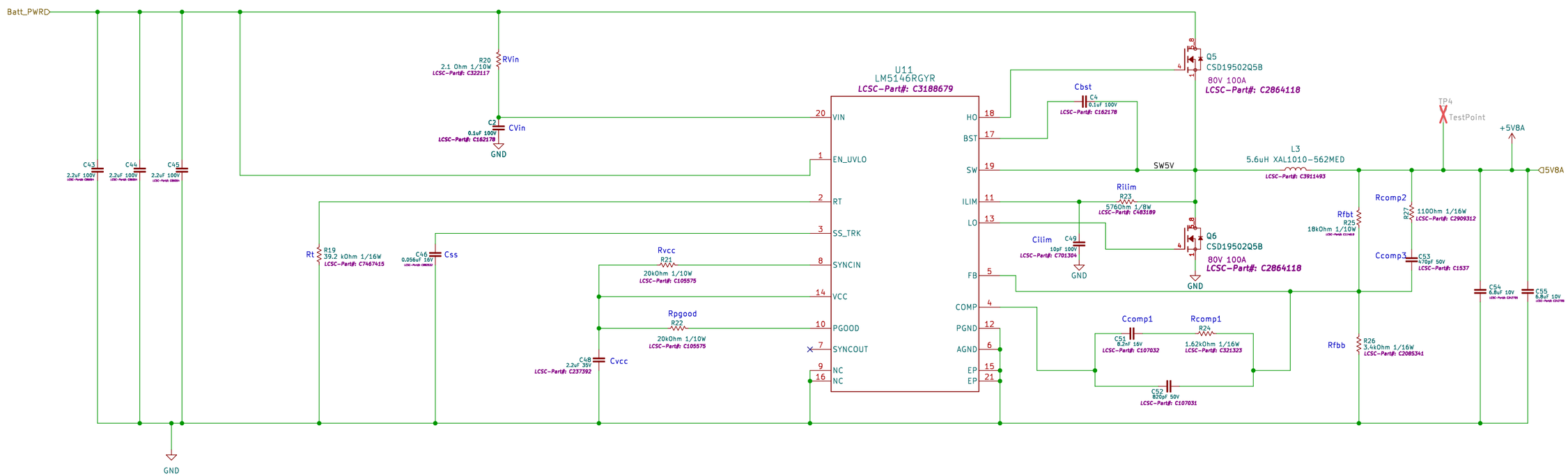
Input: 19V – 60V Output: 5V @ 8A