Gb Ethernet / PoE Input

36-57VDC 13W Max

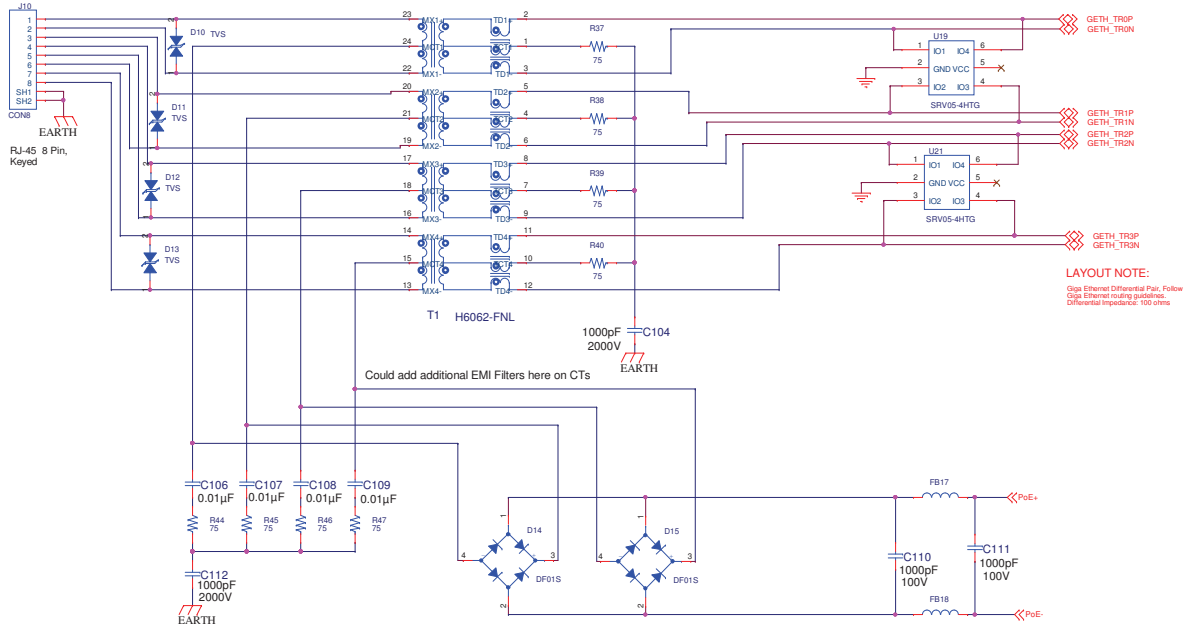

Gb Ethernet PHY

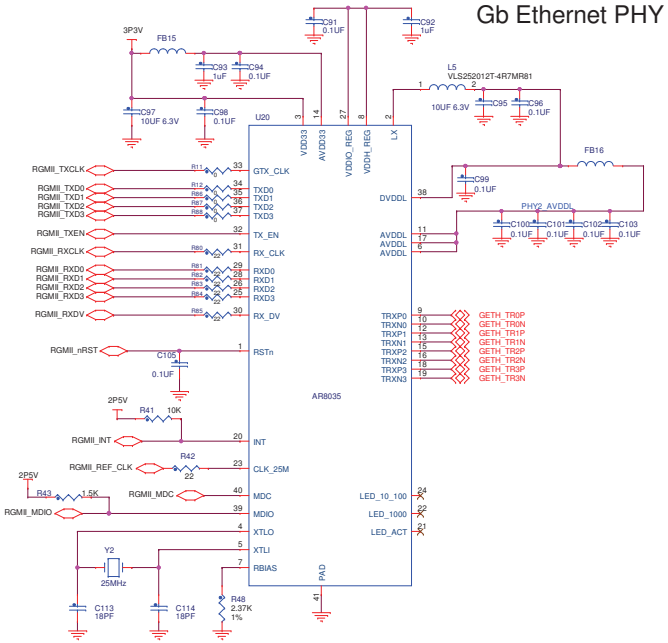

Single Point Chassis Connection

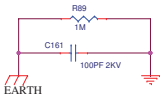

PoE Input based on TI PMP9175 REF Design

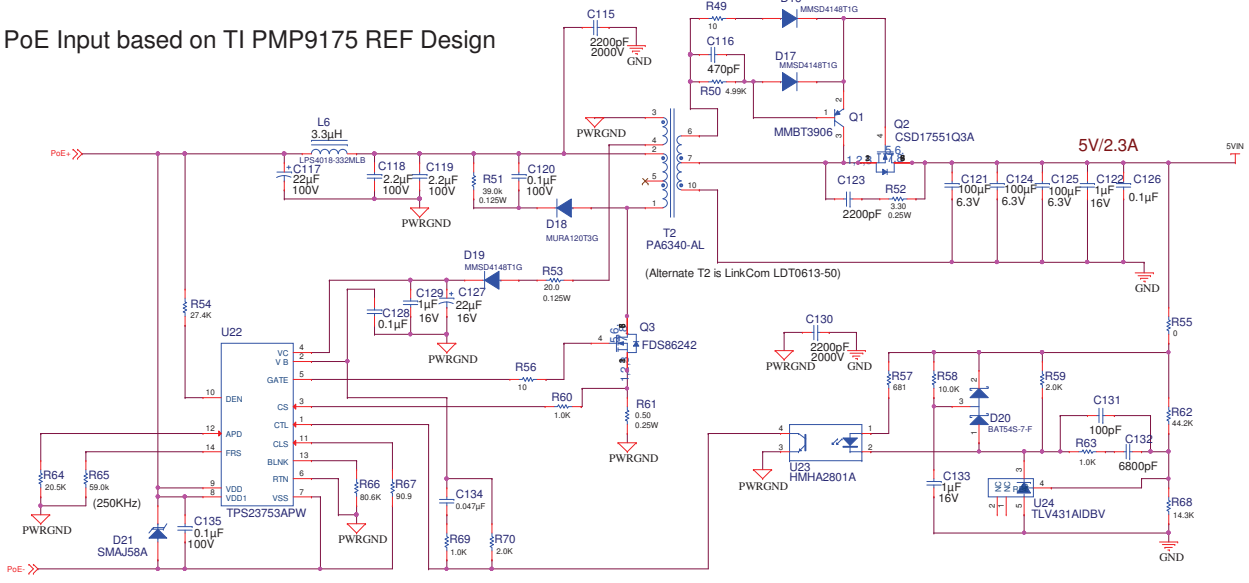

PROPRIETARY NOTICE

THE INFORMATION CONTAINED HEREIN IS PROPRIETARY AND CONFIDENTIAL TO CANETICS, LLC AND SHALL NOT BE USED OR DISCLOSED, IN WHOLE OR IN PART WITHOUT FIRST OBTAINING THE WRITTEN PERMISSION OF CANETICS, LLC.

CANETICS		
Title: 7. PoE		
Size: A2	Document Number: SCH_509-02-002	Rev: 2.0
Date: 01-18-18	Sheet 7 of 8	