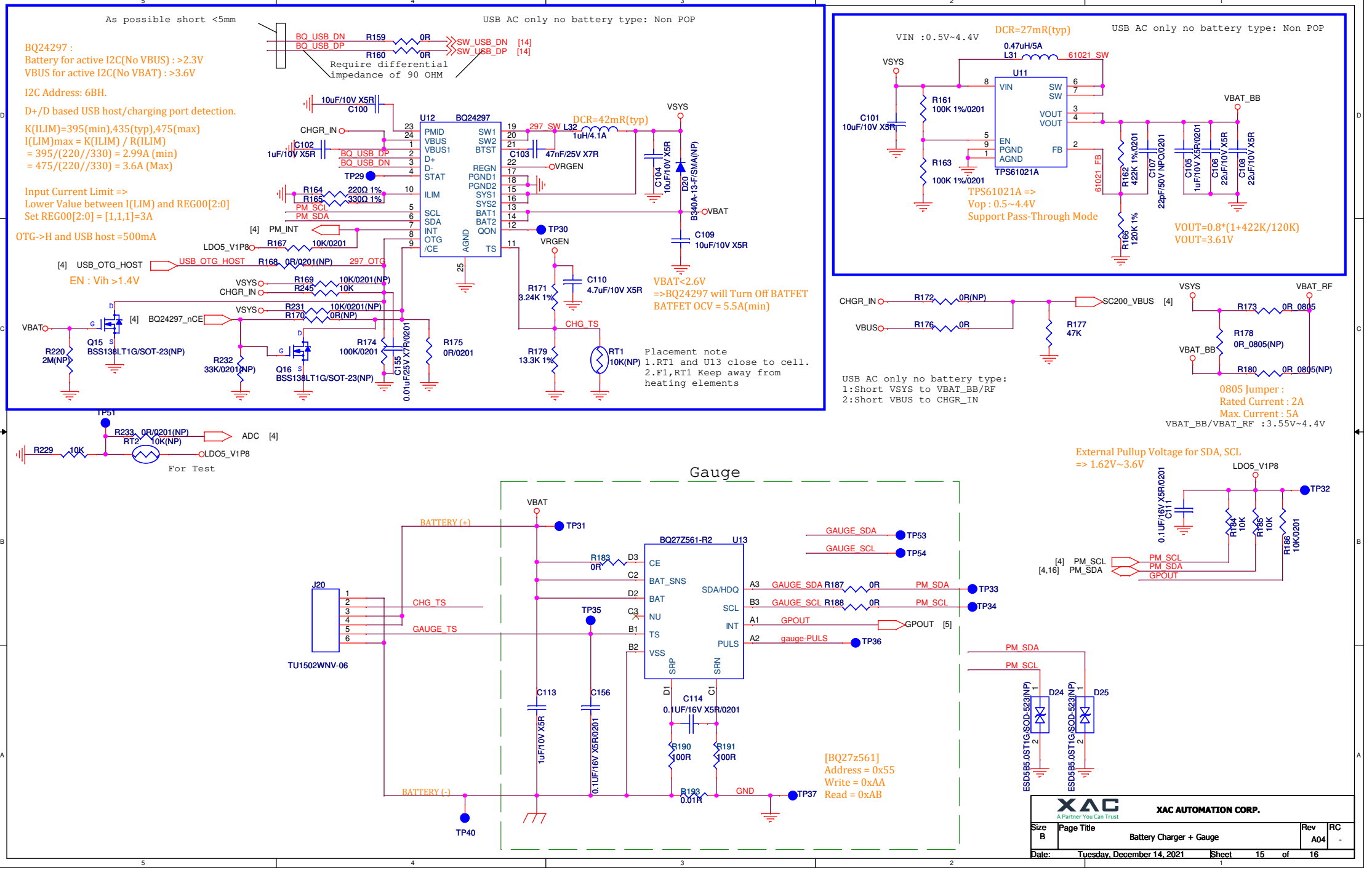
As possible short <5mm
USB AC only no battery type: Non POP
BQ24297 :
Battery for active I2C(No VBUS) : >2.3V
VBUS for active I2C(No VBAT) : >3.6V
I2C Address: 6BH.
D+/D based USB host/charging port detection.
K(ILIM)=395(min),435(typ),475(max)
I(LIM)max = K(ILIM) / R(ILIM)
= 395/(220//330) = 2.99A (min)
= 475/(220//330) = 3.6A (Max)
Input Current Limit =>
Lower Value between I(LIM) and REG00[2:0]
Set REG00[2:0] = [1,1,1]=3A
OTG->H and USB host =500mA
EN : Vih >1.4V
BQ_USB_DN R159 0R SW_USB_DN [14]
BQ_USB_DP R160 0R SW_USB_DP [14]
Require differential impedance of 90 OHM
U12 BQ24297
DCR=42mR(typ)
L32 1uH/4.1A
VBAT<2.6V
=>BQ24297 will Turn Off BATFET
BATFET OCV = 5.5A(min)
Placement note
1.RT1 and U13 close to cell.
2.F1,RT1 Keep away from heating elements
Q15 BSS138LT1G/SOT-23(NP)
Q16 BSS138LT1G/SOT-23(NP)
VIN :0.5V~4.4V
DCR=27mR(typ)
USB AC only no battery type: Non POP
U11 TPS61021A
TPS61021A =>
Vop : 0.5~4.4V
Support Pass-Through Mode
VOUT=0.8*(1+422K/120K)
VOUT=3.61V
SC200_VBUS
USB AC only no battery type:
1:Short VSYS to VBAT_BB/RF
2:Short VBUS to CHGR_IN
0805 Jumper :
Rated Current : 2A
Max. Current : 5A
VBAT_BB/VBAT_RF :3.55V~4.4V
For Test
Gauge
BQ27Z561-R2 U13
TU1502WNV-06
External Pullup Voltage for SDA, SCL
=> 1.62V~3.6V
[BQ27z561]
Address = 0x55
Write = 0xAA
Read = 0xAB
XAC AUTOMATION CORP.
A Partner You Can Trust
Size B
Page Title Battery Charger + Gauge
Rev A04
RC -
Date: Tuesday, December 14, 2021
Sheet 15 of 16