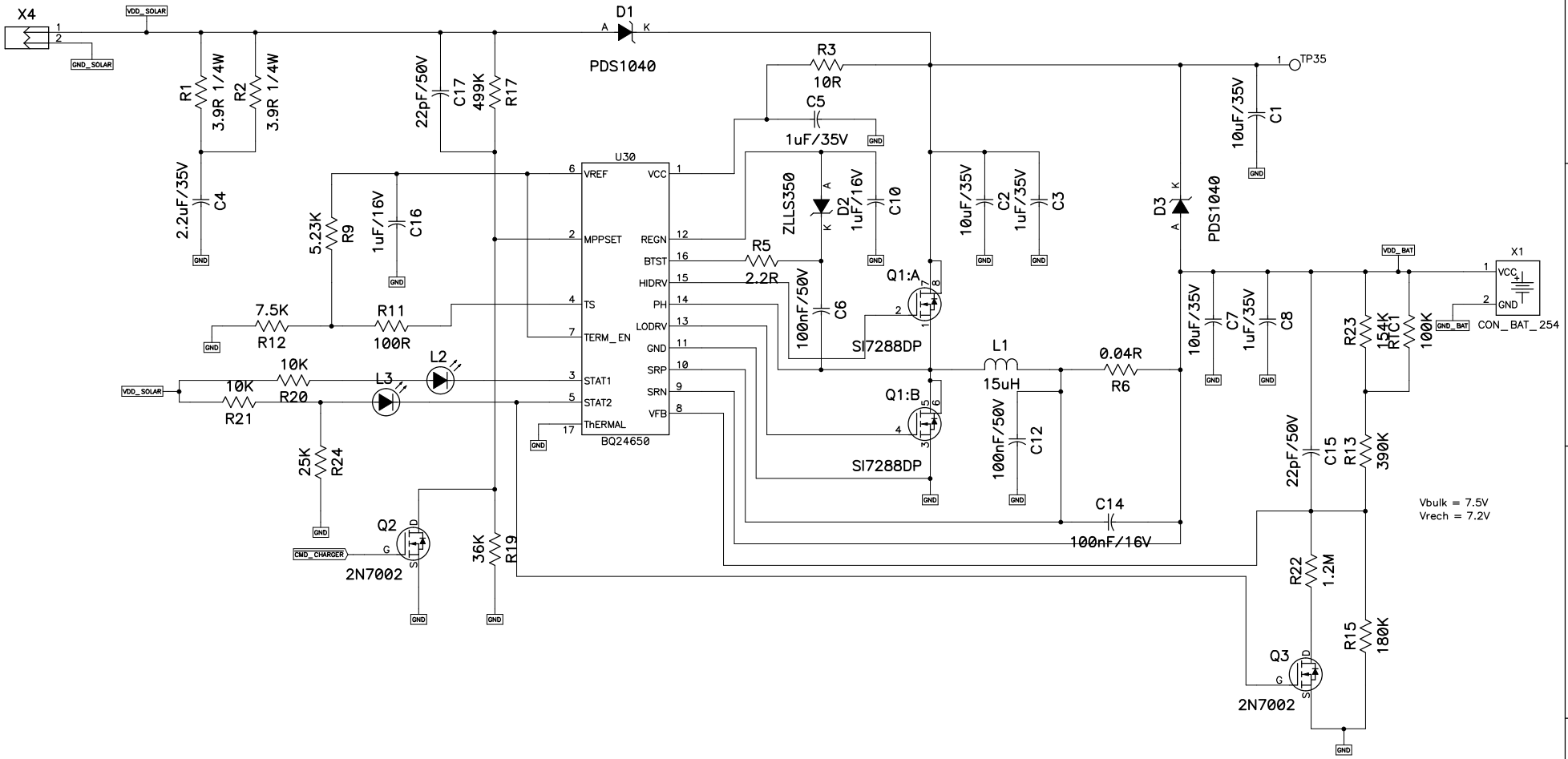

Title	Lead–Acid Battery charger	
Size A3	Number	Rev
Date Thu Aug 24, 2017	Drawn by GLZ	
Filename Charger_V105.sch	Sheet 1 of 1	