02-USB-C

USB-C Power Types Comparison

Charger Type	Typical Power Range	Notes
Basic/Legacy USB-C	5W - 15W	Designed for phones, small devices; slow for laptops
USB-C PD (Mid-range)	30W - 65W	Versatile for many laptops and tablets
High-power USB-C PD	65W - 100W+	Required for demanding laptops or multi-device use

POWER INPUT USB-C:
Targeting use of both USBC PD capable adapter delivering 30W to 65W
as well as USB-C non PD at 15W (5V x 3A) for future ARM based low power units
Design goal is 30W max powerdraw, so that any PD type adapter can be used.
Max Vin is 20, so design goal is max 30V for margin

THIS DESIGN CAN WORK WITH BOTH TPS25730D and TPS25750D

PLACE PCB FOOTPRINTS ON TOP OF EACHOTER IN LAYOUT

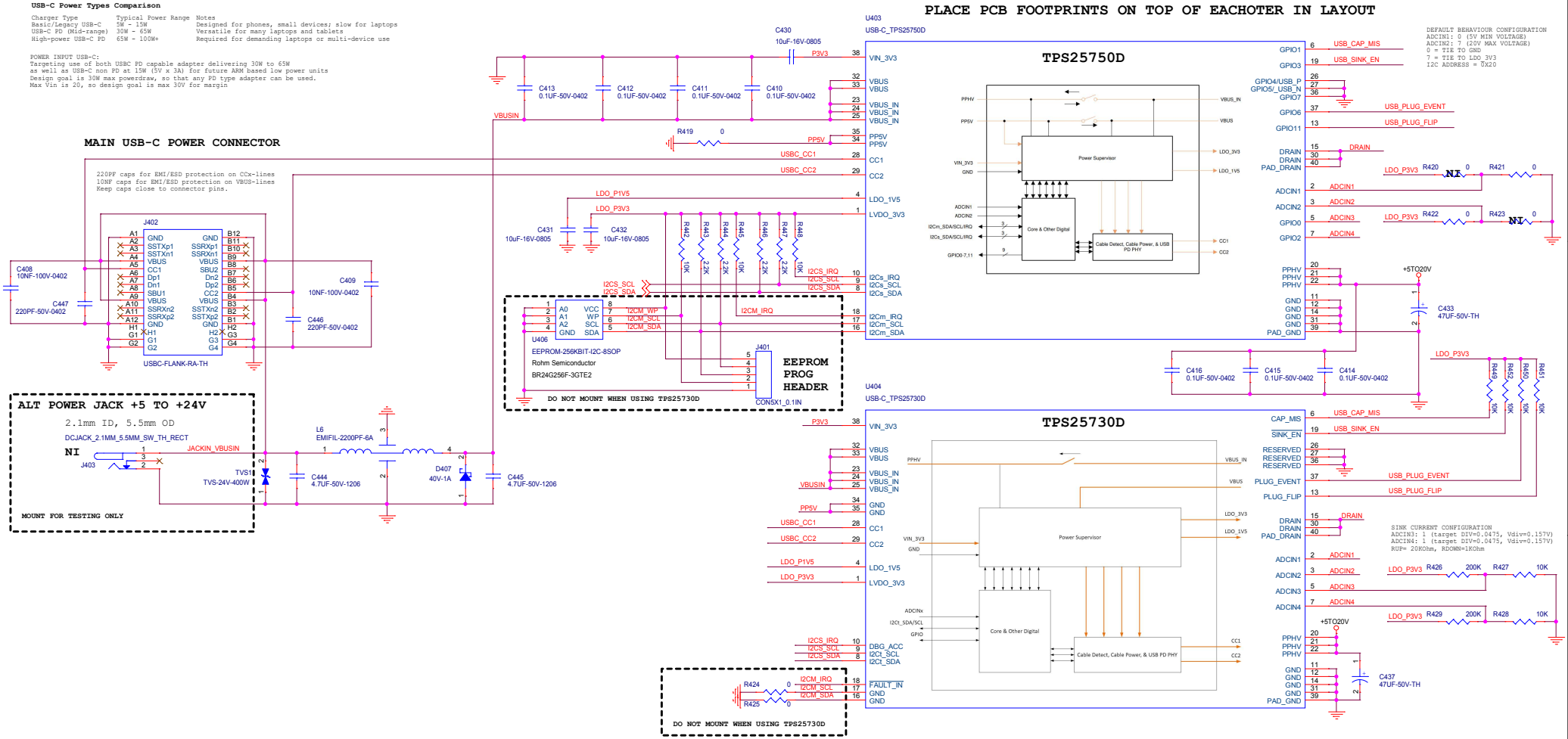

Title	<Title>	
Size C	Document Number <Doc>	Rev A
Date: Tuesday, February 20, 2024	Sheet 2 of 6	