DC/DC islolation

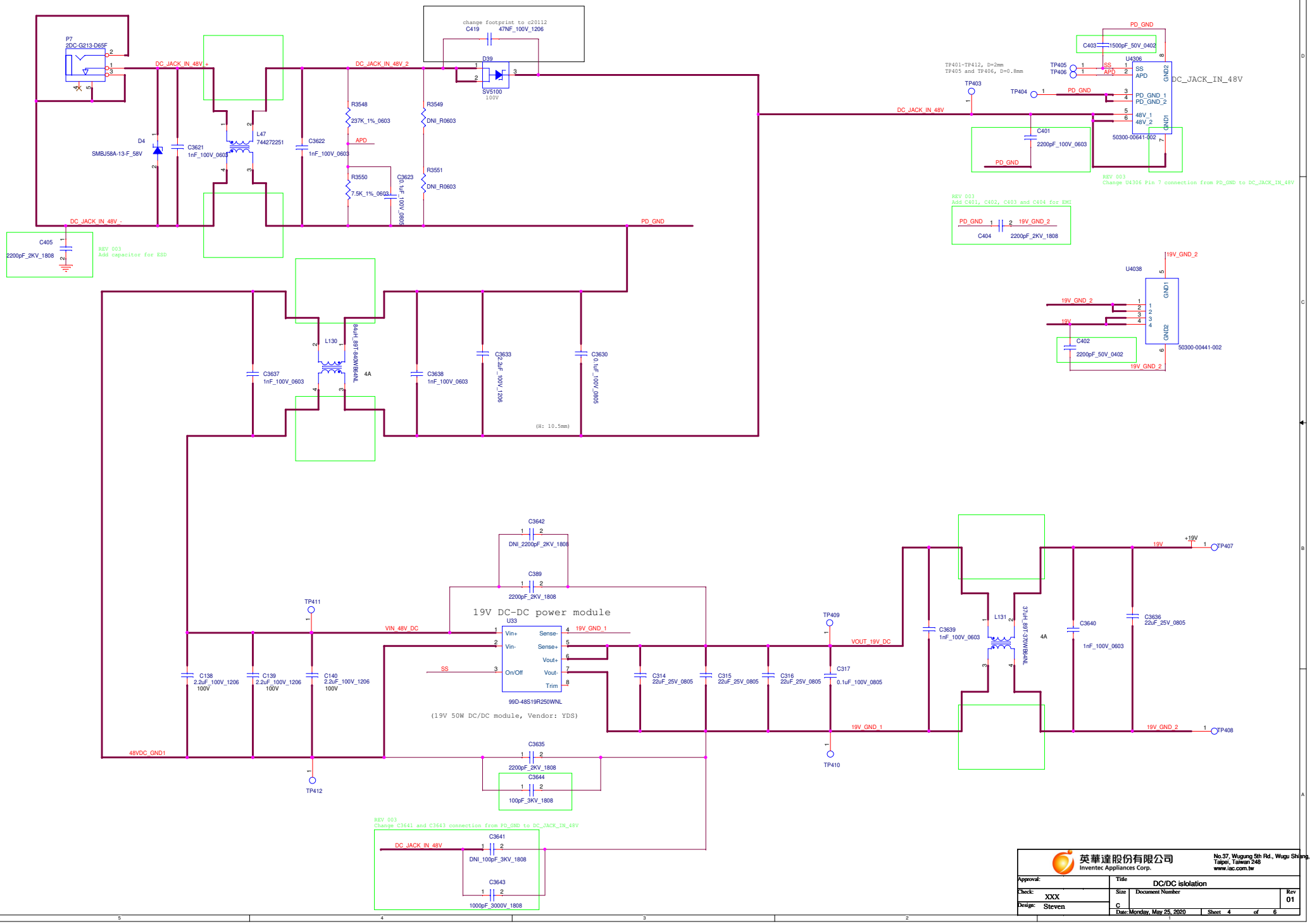

英華達股份有限公司 Inventec Appliances Corp.		No.37, Wugung 5th Rd., Wugu Shiang, Taipei, Taiwan 248 www.iac.com.tw	
Approval:	Title: DC/DC islolation		
Check: XXX	Size: C	Document Number	Rev: 01
Design: Steven	Date: Monday, May 25, 2020	Sheet 4 of 6	