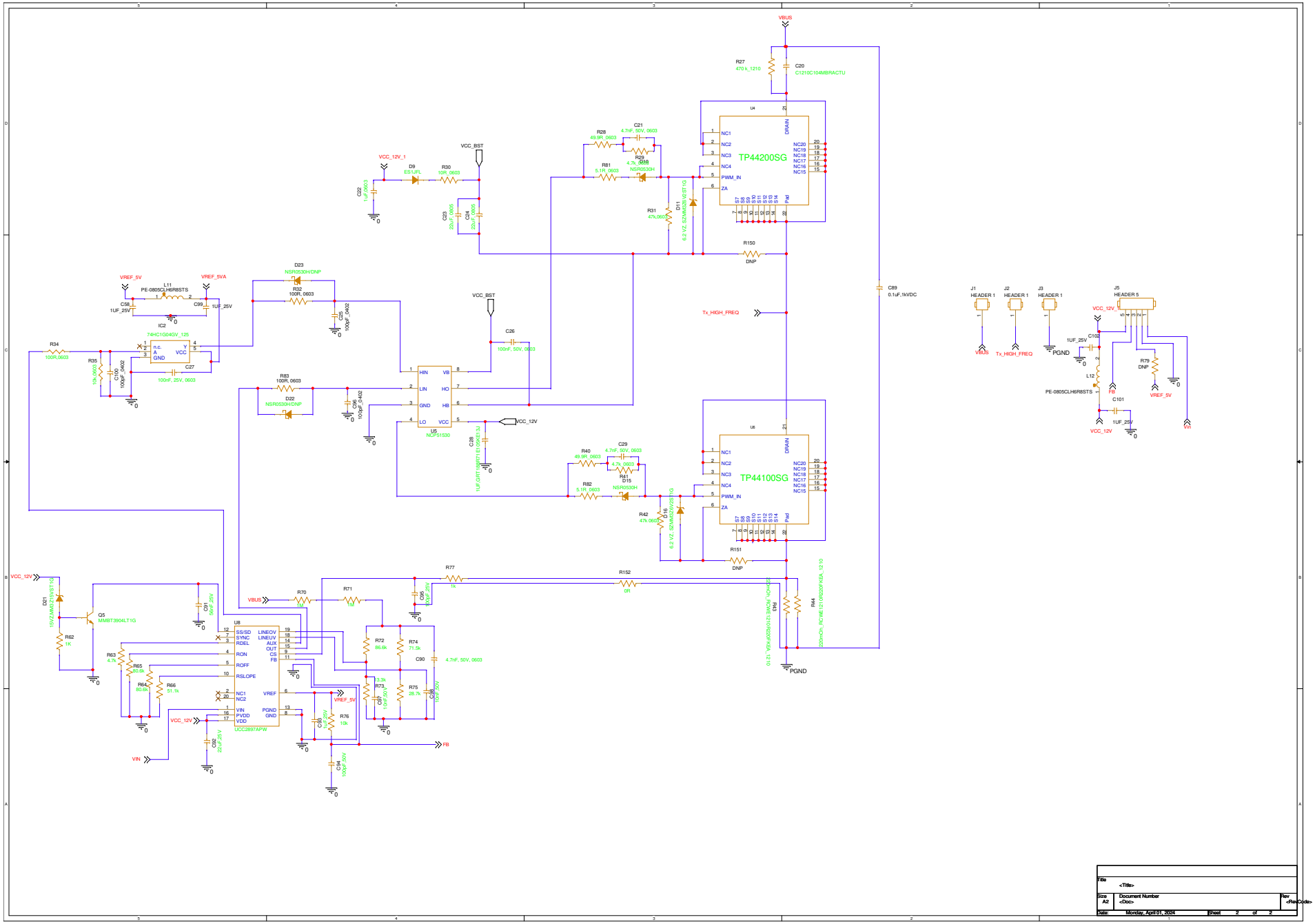

Title	<Title>
Size A2	Document Number <Doc>
Rev	<RevCode>
Date: Monday, April 01, 2024	Sheet 2 of 2