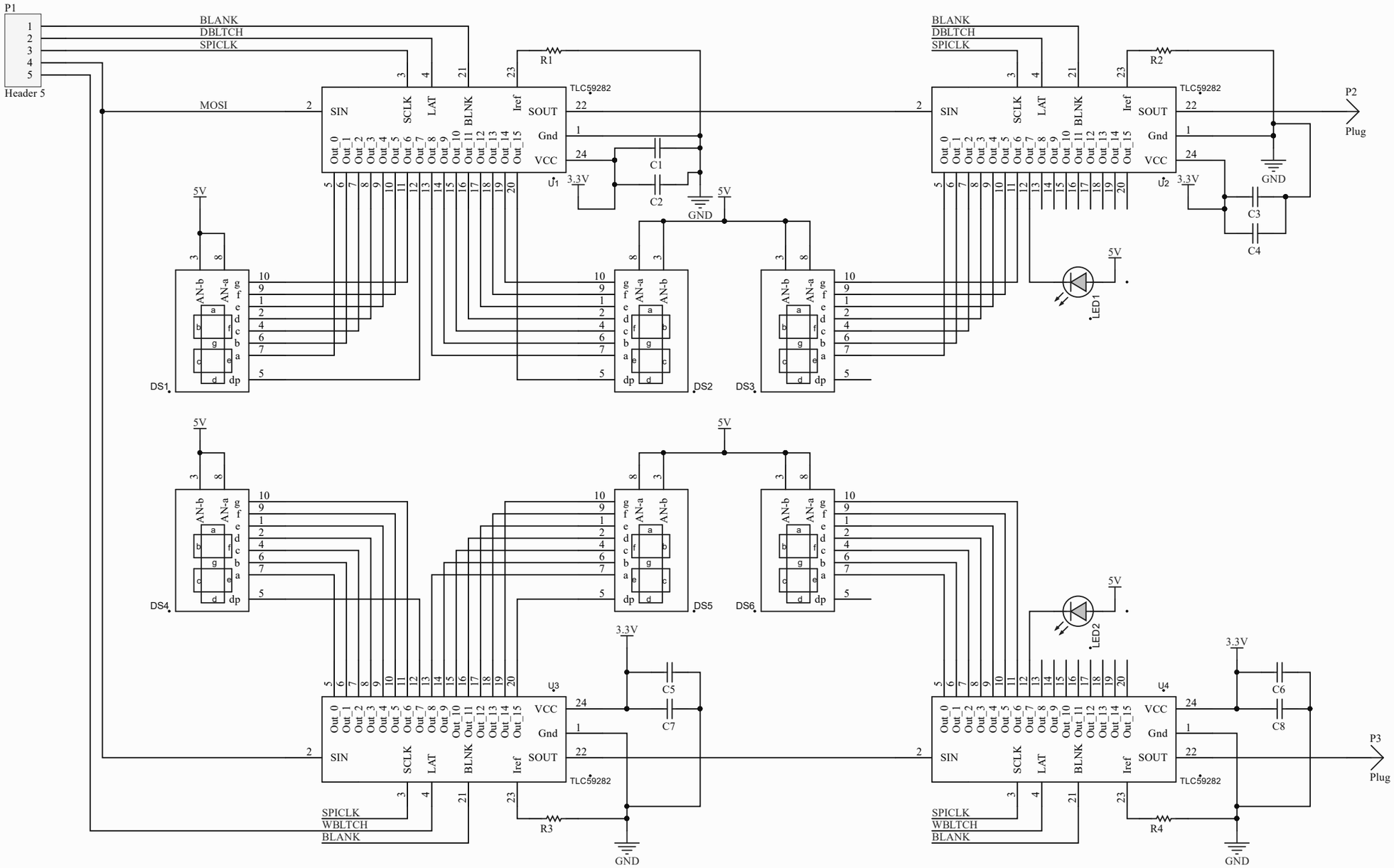

Title		
Size B	Number	Revision
Date: 4/5/2018		Sheet of
File: \\..\Display.SchDoc		Drawn By: