DPSC

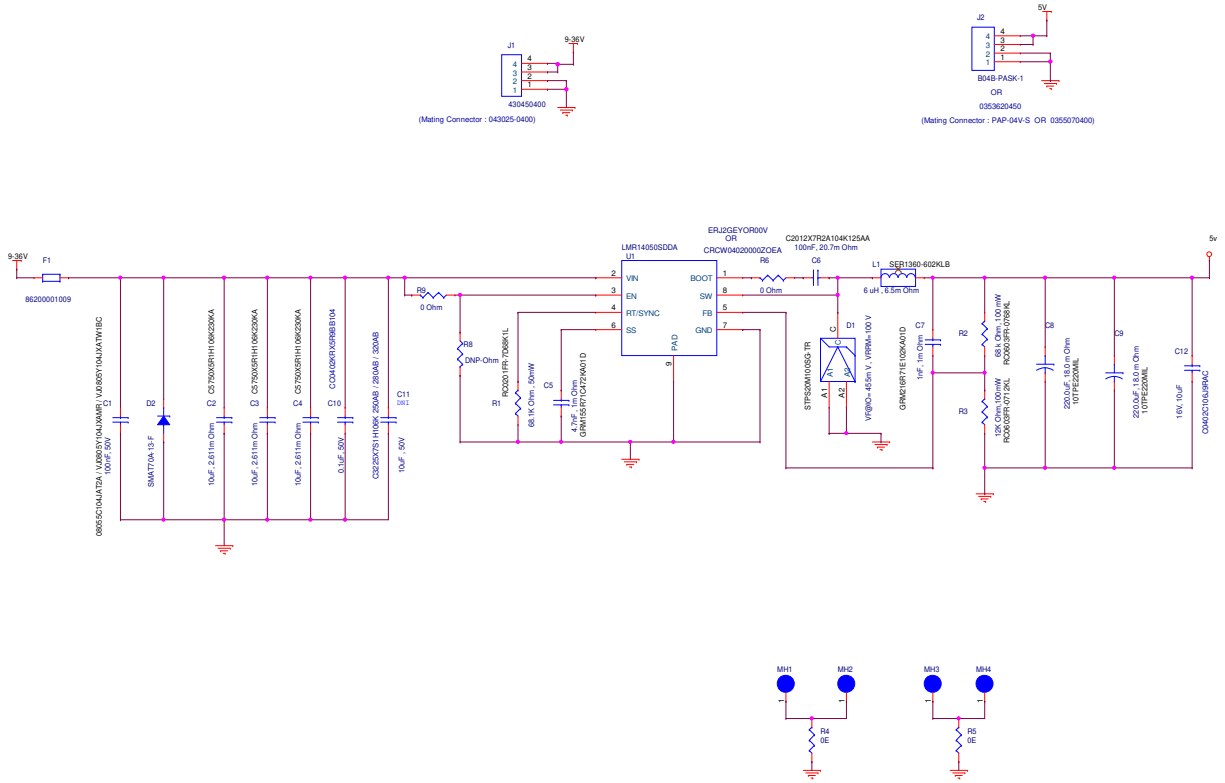

Title	DPSC
Size A2	Document Number <Doc>
Rev	<RevCode>
Date:	Thursday, August 12, 2021
Sheet	1 of 1