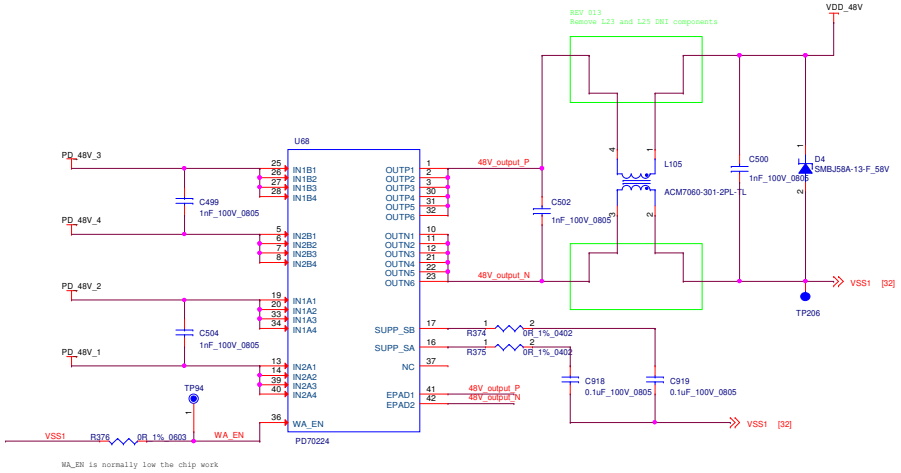

POWER CONNECTOR 48V IN

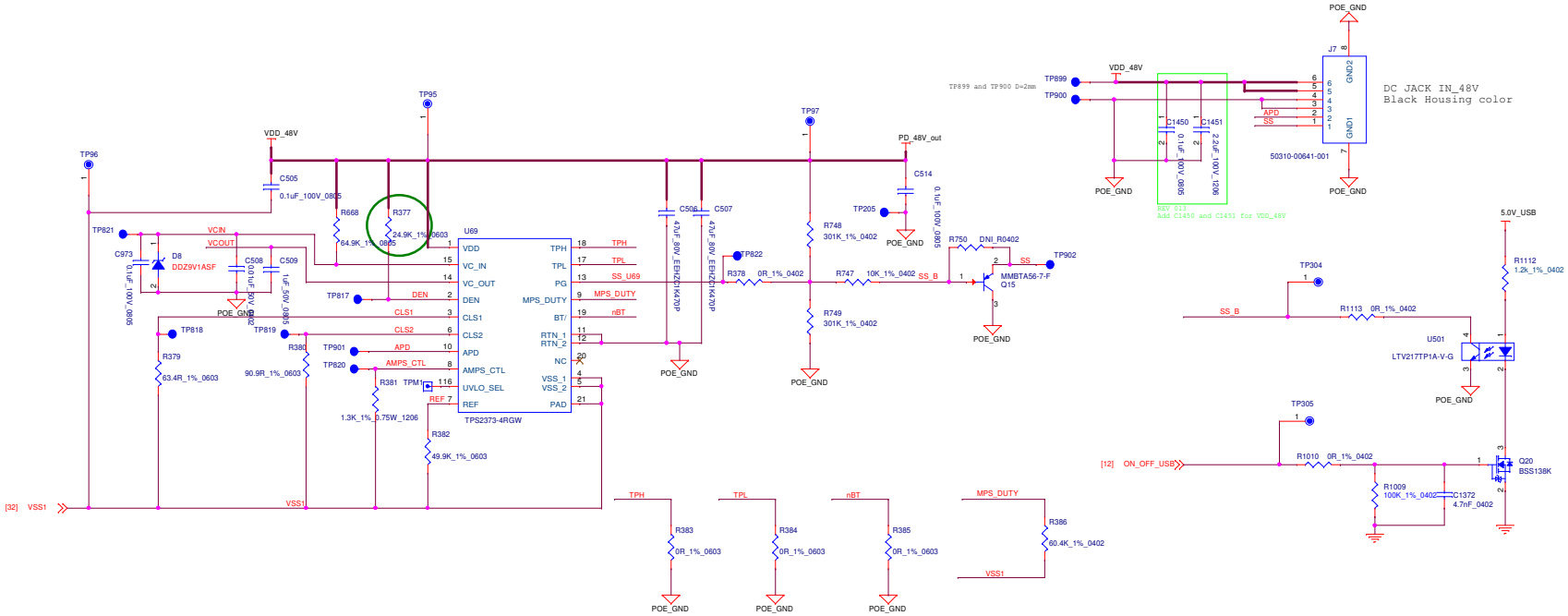

英華達股份有限公司 Inventec Appliances Corp.	No.37, Wugung 5th Rd., Wugu District, New Taipei City, Taiwan 24890 www.iac.com.tw		
Approval: Jerry Chao	Title: Viking DVT Main Board		
Check: Eric-YL Chen	Size: A2	Document Number: PoE PD Front End	Rev: 013
Design: Steven Kang	Date: Monday, June 01, 2020	Sheet 32 of 60	