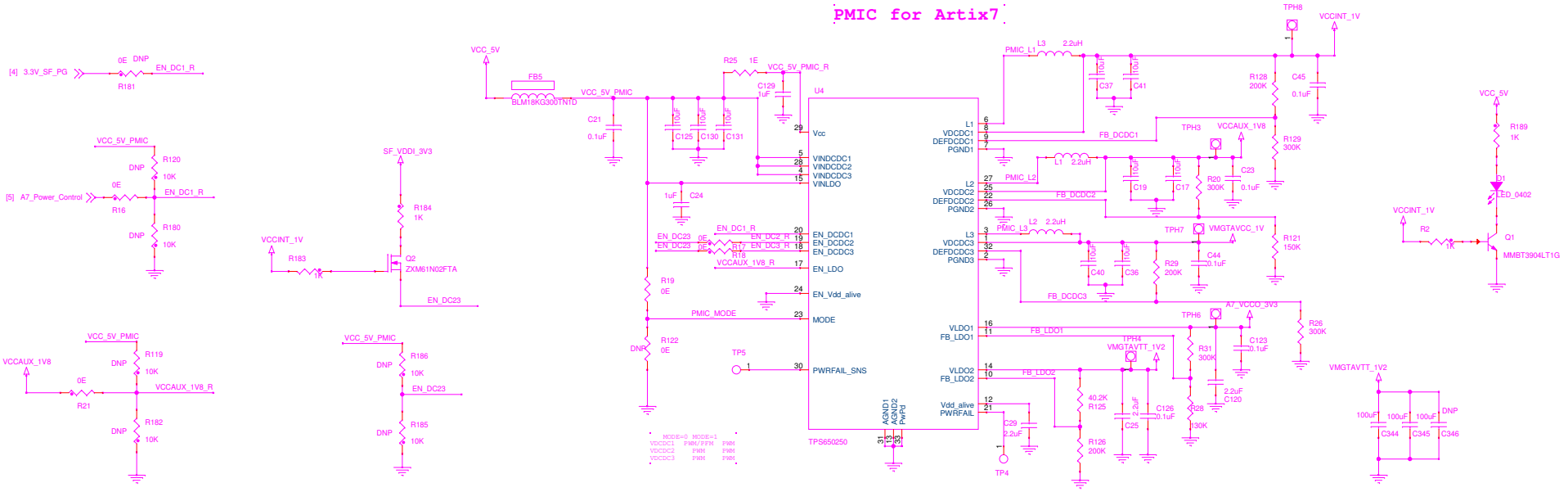PMIC for Artix7