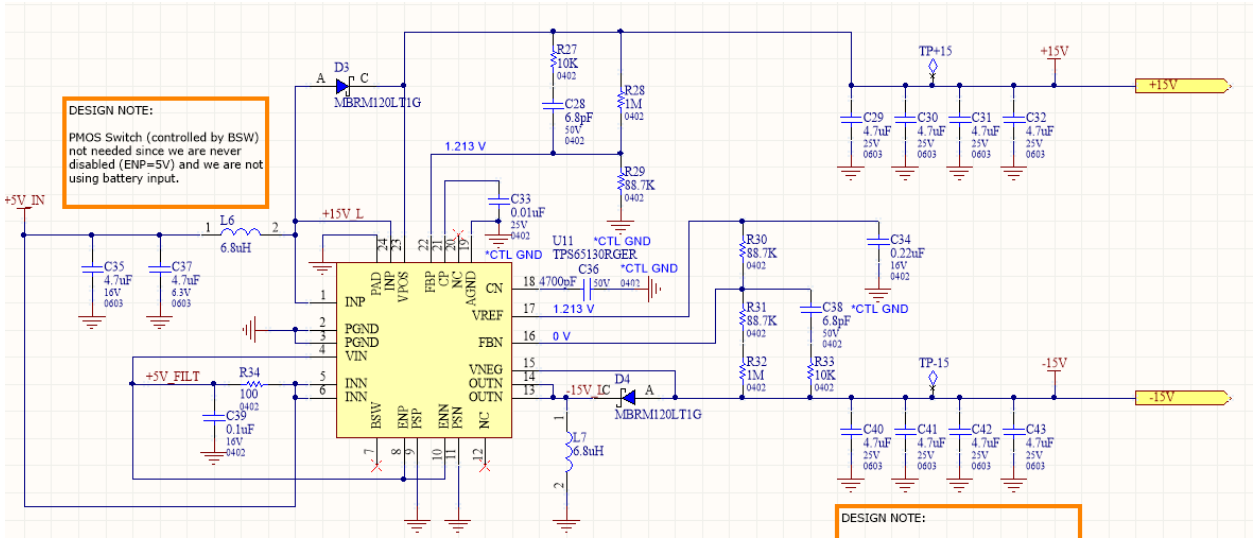
DESIGN NOTE:
PMOS Switch (controlled by BSW) not needed since we are never disabled (ENP=5V) and we are not using battery input.
+5V_IN
L6
6.8uH
C35
4.7uF
16V
0603
C37
4.7uF
6.3V
0603
+5V_FILT
R34
100
0402
C39
0.1uF
16V
0402
D3
MBRM120LT1G
+15V_L
R27
10K
0402
C28
6.8pF
50V
0402
R28
1M
0402
R29
88.7K
0402
1.213 V
C33
0.01uF
25V
0402
*CTL GND
U11
TPS65130RGER
C36
4700pF
50V
0402
*CTL GND
PAD
INP
VPOS
FBP
CP
NC
AGND
INP
PGND
PGND
VIN
INN
INN
BSW
ENP
PSP
ENN
PSN
NC
CN
VREF
FBN
VNEG
OUTN
OUTN
1.213 V
0 V
-15V_IC
D4
MBRM120LT1G
L7
6.8uH
R30
88.7K
0402
R31
88.7K
0402
R32
1M
0402
C38
6.8pF
50V
0402
R33
10K
0402
C34
0.22uF
16V
0402
TP+15
+15V
C29
4.7uF
25V
0603
C30
4.7uF
25V
0603
C31
4.7uF
25V
0603
C32
4.7uF
25V
0603
TP-15
-15V
C40
4.7uF
25V
0603
C41
4.7uF
25V
0603
C42
4.7uF
25V
0603
C43
4.7uF
25V
0603
DESIGN NOTE:

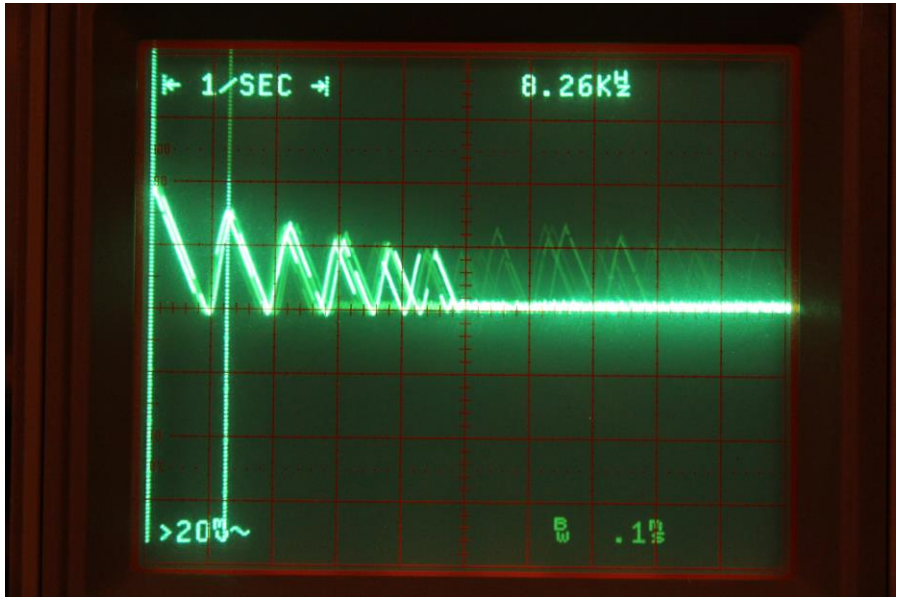
1/SEC
8.26KHz
>20MHz
BW .1MHz