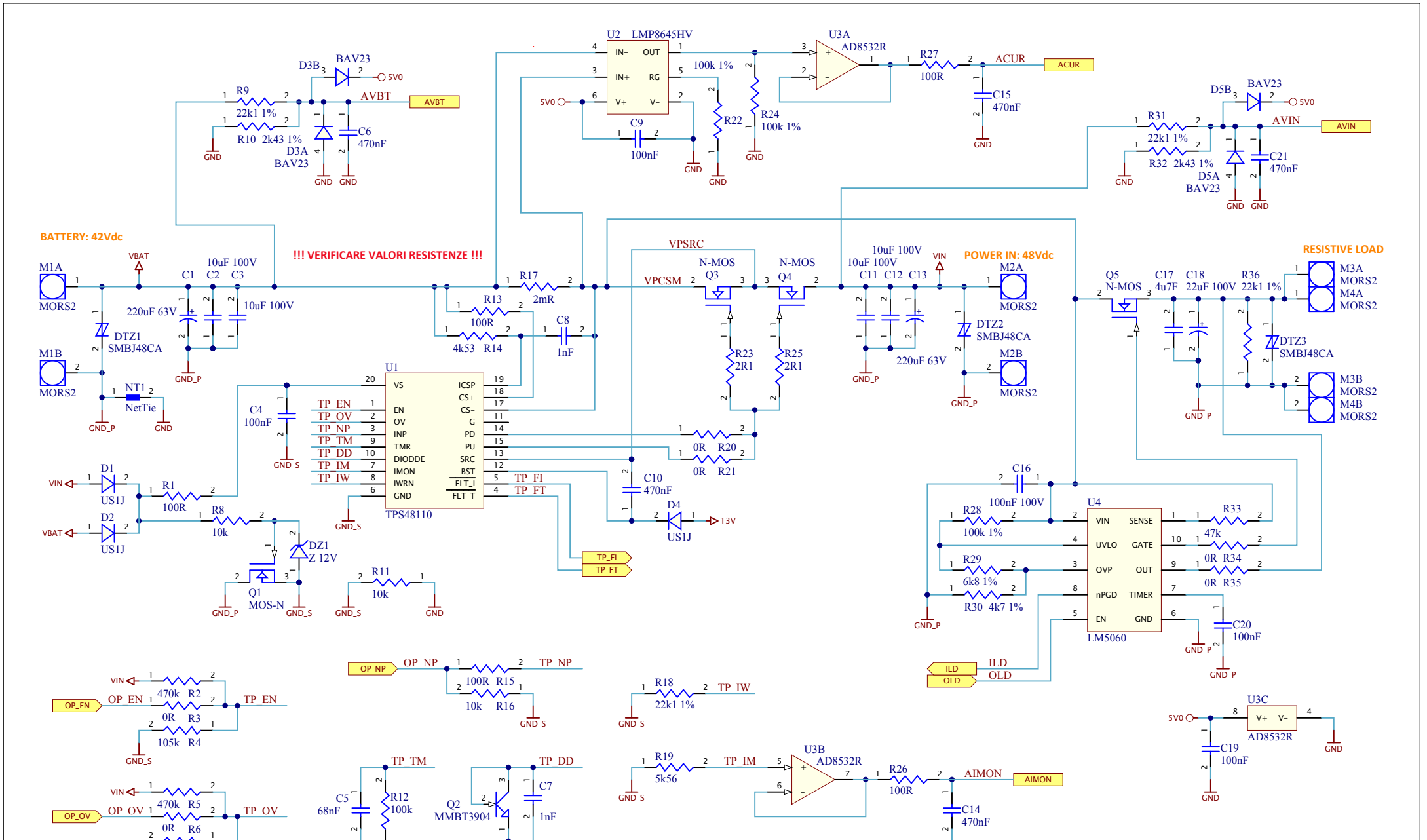
BATTERY: 42Vdc
!!! VERIFICARE VALORI RESISTENZE !!!
POWER IN: 48Vdc
RESISTIVE LOAD
U1 TPS48110
U2 LMP8645HV
U3A AD8532R
U3B AD8532R
U3C AD8532R
U4 LM5060
M1A MORS2
M1B MORS2
M2A MORS2
M2B MORS2
M3A MORS2
M4A MORS2
M3B MORS2
M4B MORS2
ACUR
AVBT
AVIN
AIMON
OP_EN
OP_OV
OP_NP
ILD
OLD
TP_EN
TP_OV
TP_NP
TP_TM
TP_DD
TP_IM
TP_IW
TP_FI
TP_FT
VPSRC
VPCSM
N-MOS Q3
N-MOS Q4
Q5 N-MOS
Q1 MOS-N
Q2 MMBT3904
DTZ1 SMBJ48CA
DTZ2 SMBJ48CA
DTZ3 SMBJ48CA
D3A BAV23
D3B BAV23
D5A BAV23
D5B BAV23
D1 US1J
D2 US1J
D4 US1J
DZ1 Z 12V
VT1 VITE
VT2 VITE
VT3 VITE
VT4 VITE
Rev. 2.0
02095_BRT
Battery & Load management
Sheet 1 of 3
Size: A4
Date: 23/10/2024 08:28:52
JANUS