EPD_Power_ control

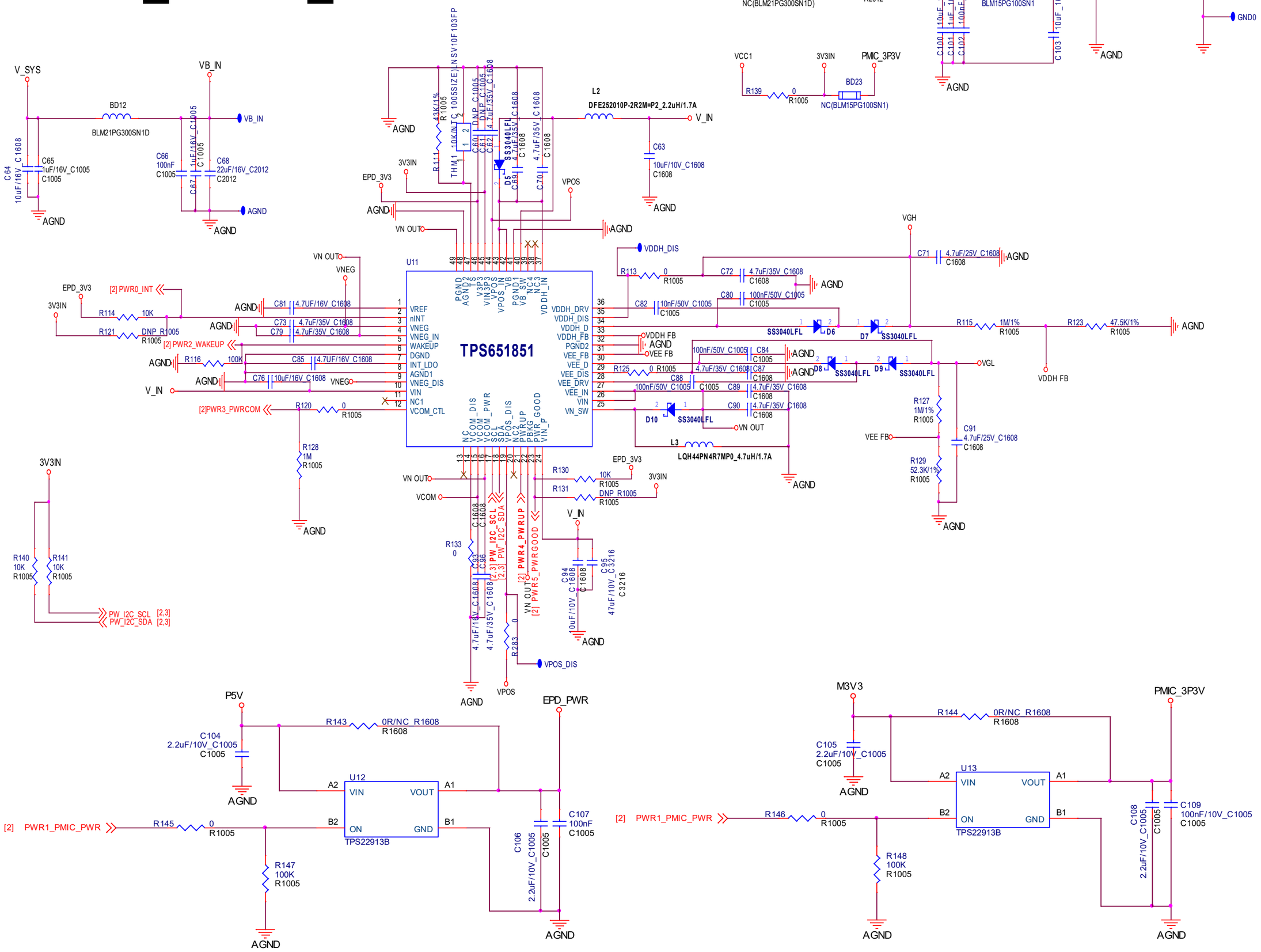
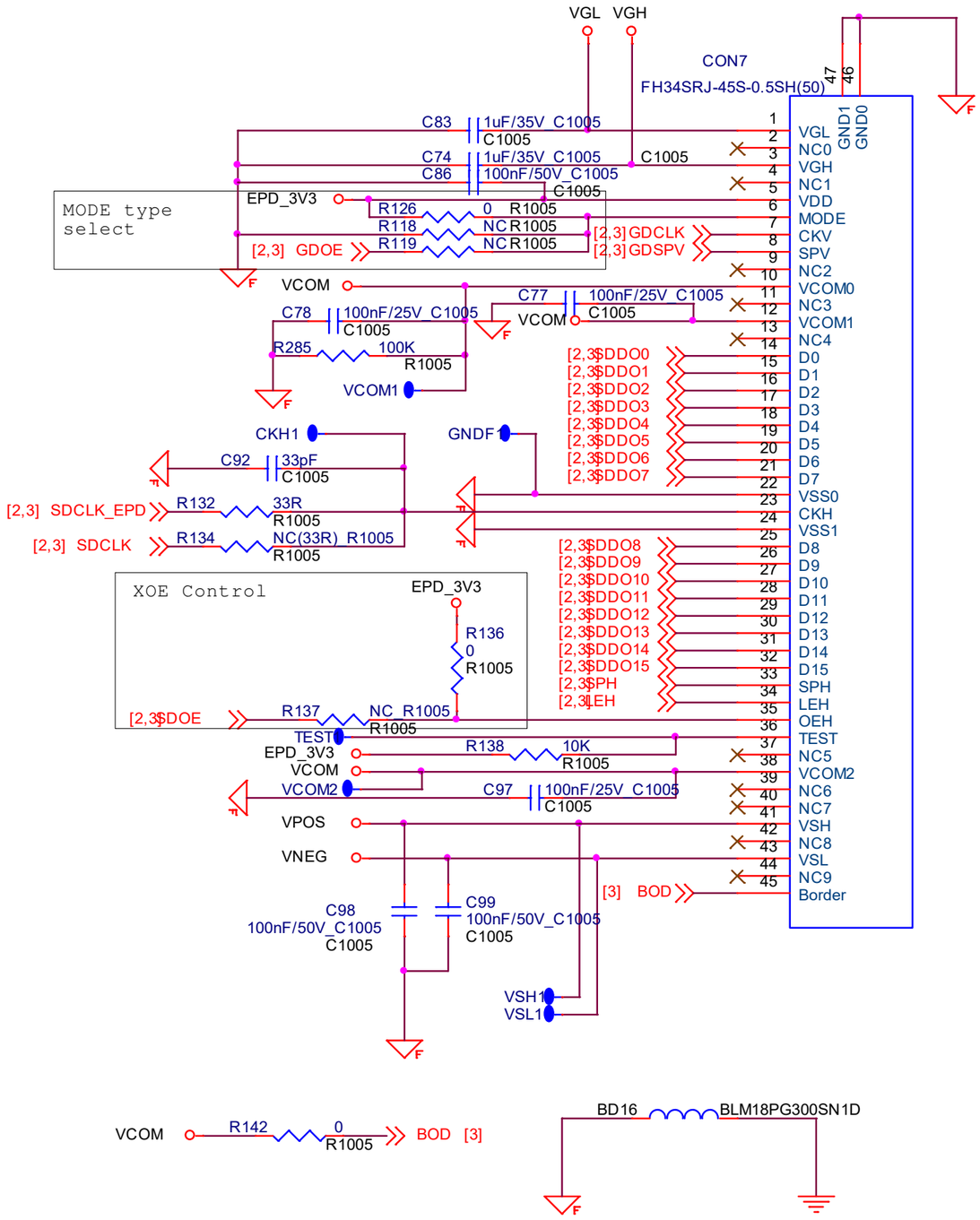
EPD PANEL CONNECTOR_ I/O