2.5G Ethernet & LAN Transformer

2.5G CH1 RJ45 黑

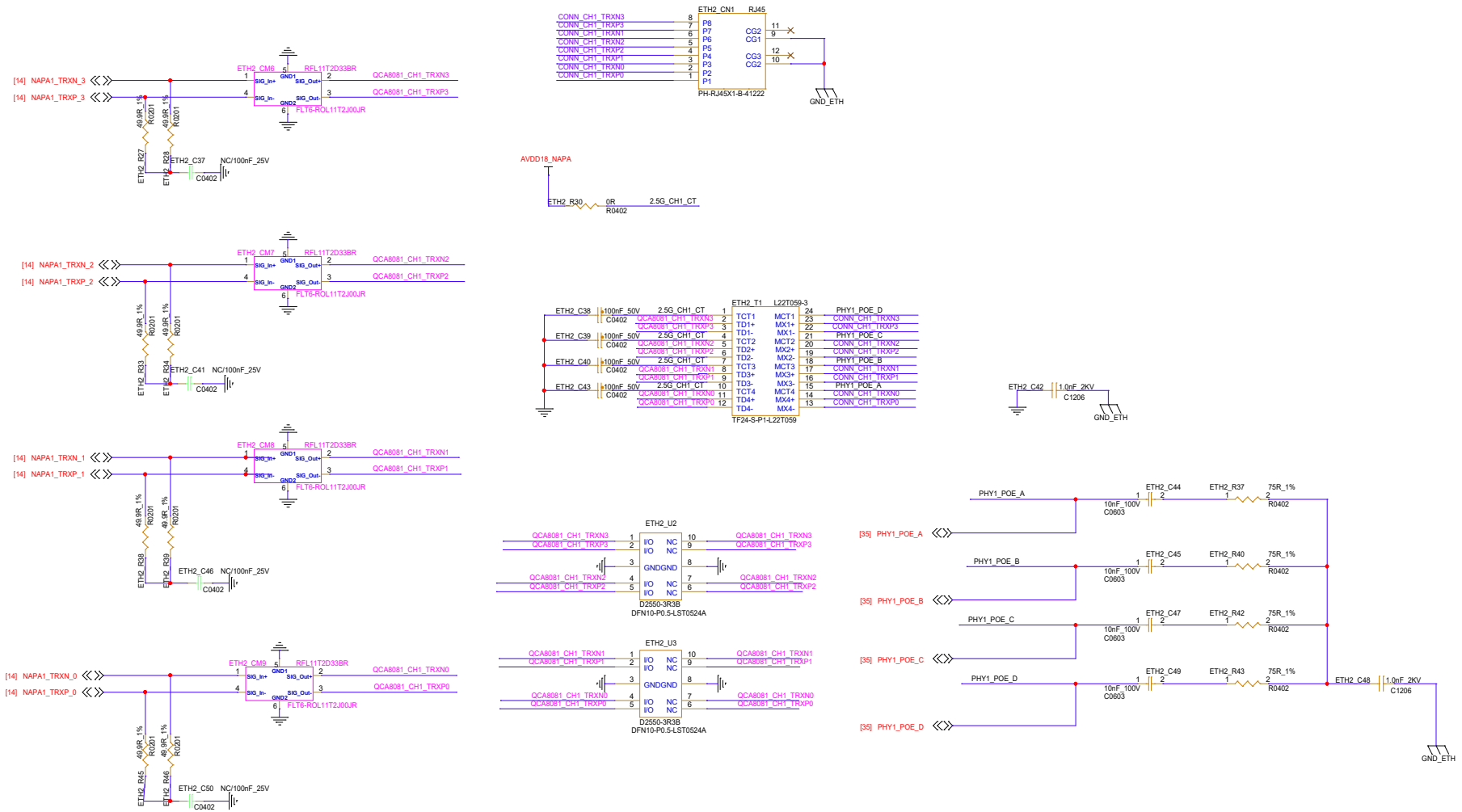

EDIMAX NETWORKING PEOPLE TOGETHER	訊舟科技股份有限公司 Edimax Technology Co., Ltd		
Project Code : TBD			
Product Name : EW-7689FTI		Designer : Ocean	
Size C	Document Number : 15_PHY1_2.5G_RJ45		Rev. V1.0A
Date : Tuesday, January 07, 2025		Sheet 15 of 37	

CLASS	POWER AT PD		RESISTOR (Ω)	NOTES
	MINIMUM (W)	MAXIMUM (W)		
0	0.44	13	1270	Minimum may be reduced by pulsed loading. Serves as a catch-all default class.
1	0.44	3.84	243	
2	3.84	6.49	137	
3	6.49	13	90.9	
4	13	25.5	63.4	Not allowed before IEEE 802.3at. Use to indicate a Type 2 PD (high power) device per IEEE 802.3at.

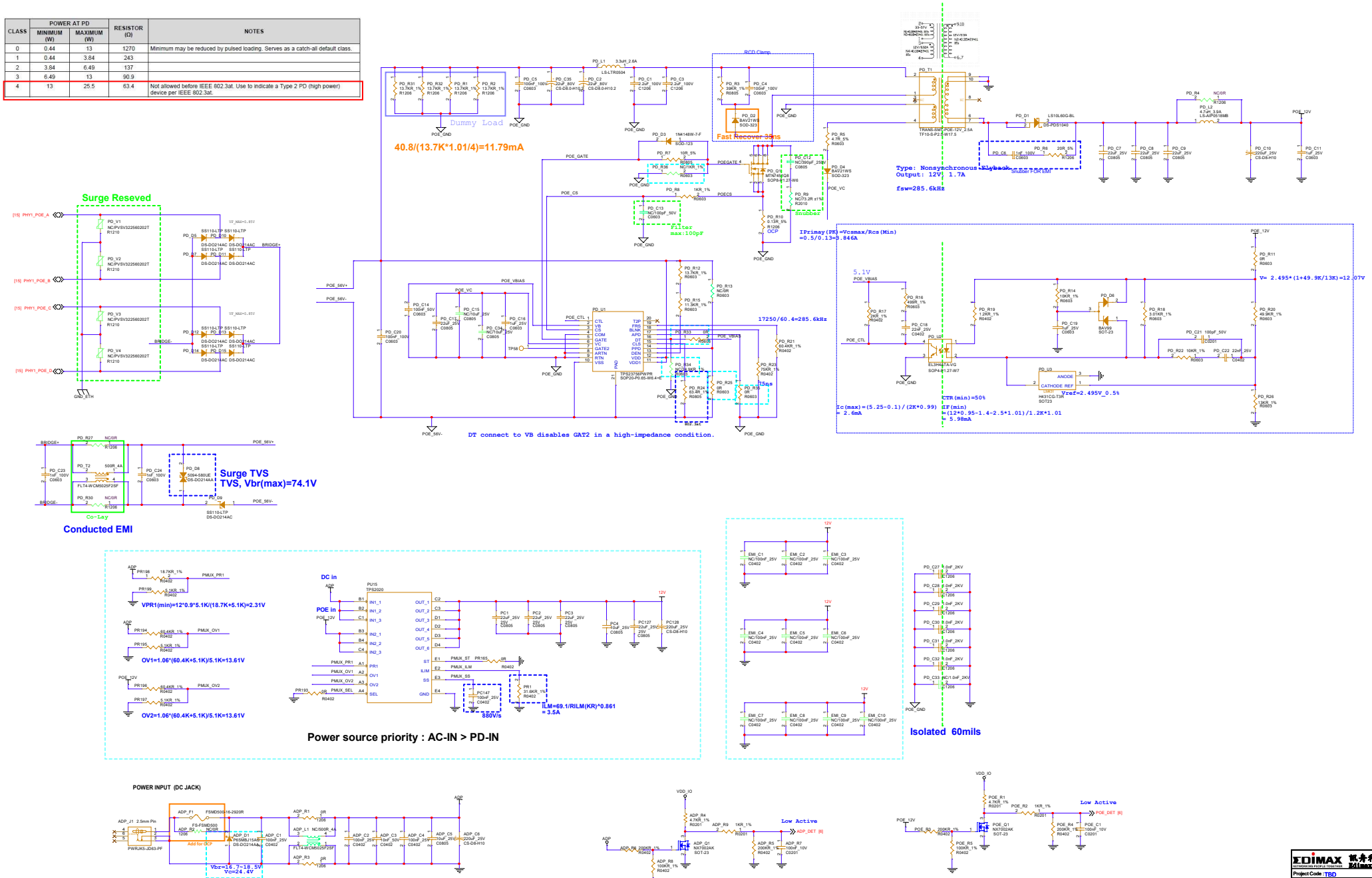

EDIMAX 訊舟科技股份有限公司 Edimax Technology Co., Ltd

Project Code :	TBD
Product Name :	EW-7689FTI
Designer :	Ocean
Size	D
Document Number :	35_POE & DC Jack
Rev.	V1.0A
Date :	Tuesday, January 07, 2025
Sheet	35 of 37