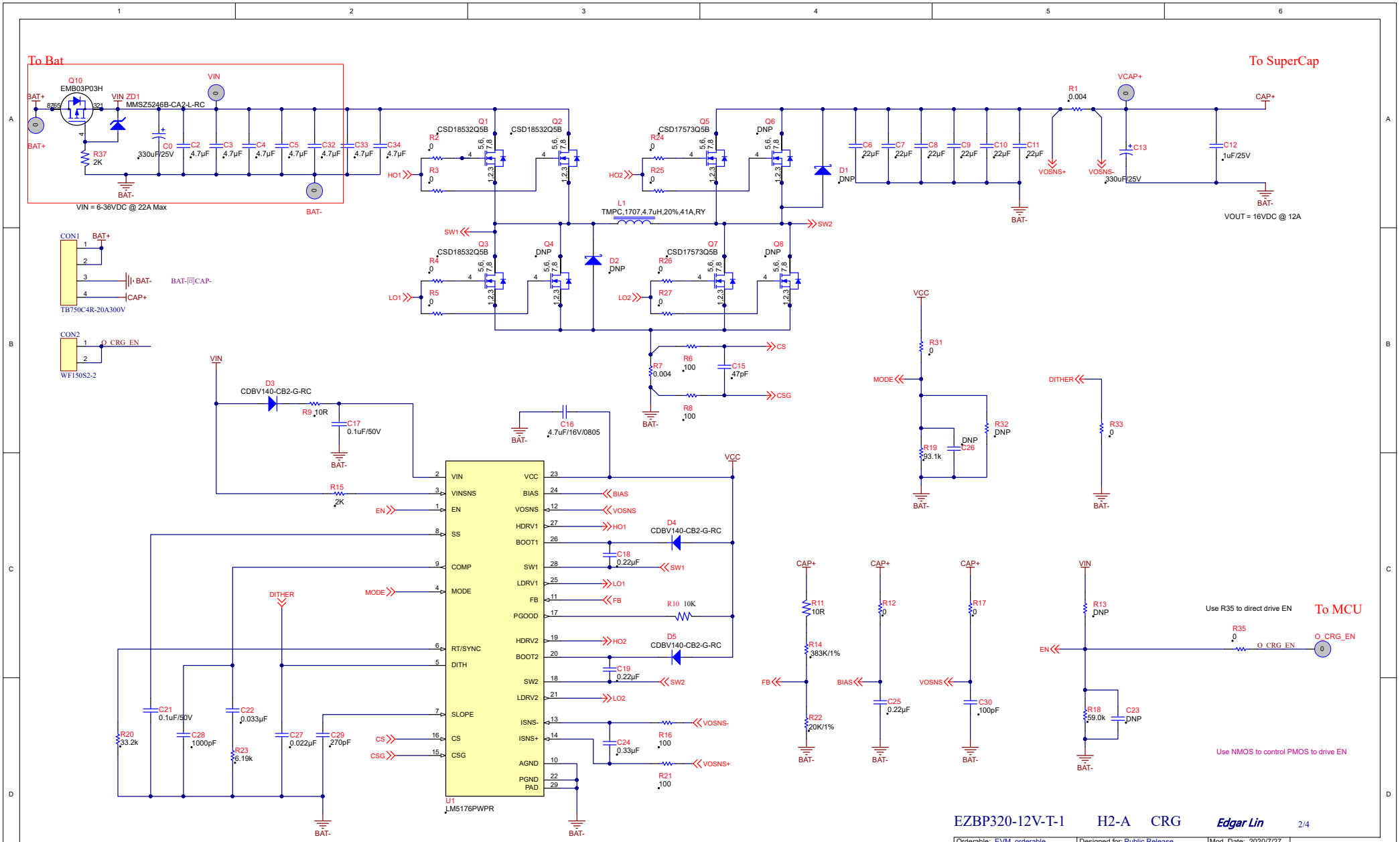

Texas Instruments and/or its licensors do not warrant the accuracy or completeness of this specification or any information contained therein. Texas Instruments and/or its licensors do not warrant that this design will meet the specifications, will be suitable for your application or fit for any particular purpose, or will operate in an implementation. Texas Instruments and/or its licensors do not warrant that the design is production worthy. You should completely validate and test your design implementation to confirm the system functionality for your application.

Orderable: EVM_orderable	Designed for: Public Release	Mod. Date: 2020/7/27	
TID #: TID	Project Title: LM5176EVM-HP		
Number: SV601348 Rev: A	Sheet Title: Buck Boost Converter EVM		
SVN Rev: Not in version control	Assembly Variant: [No Variations]	Sheet: 2 of 2	
Drawn By: Kim Nielson	File: EZBP320-12V-T-1-H2-A.SchDoc	Size: B	
Engineer: V Choudhary	Contact: http://www.ti.com/support		

Texas Instruments
http://www.ti.com
© Texas Instruments 2017