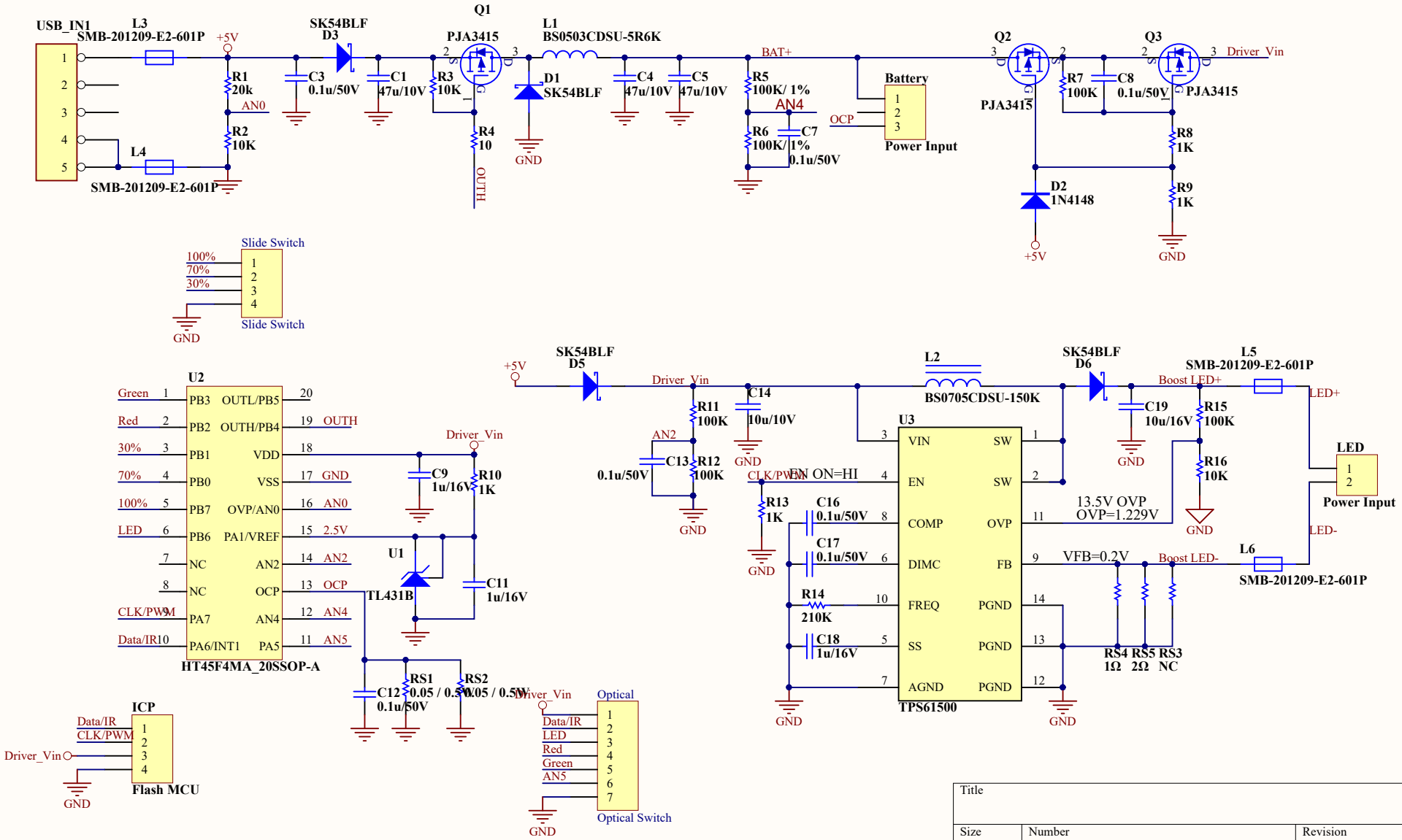

Title		
Size A4	Number	Revision
Date: 2016/11/21	Sheet of	
File: D:\Will Huang\..\Ether unplugged Ver_B3.SchDoc	Drawn By:	

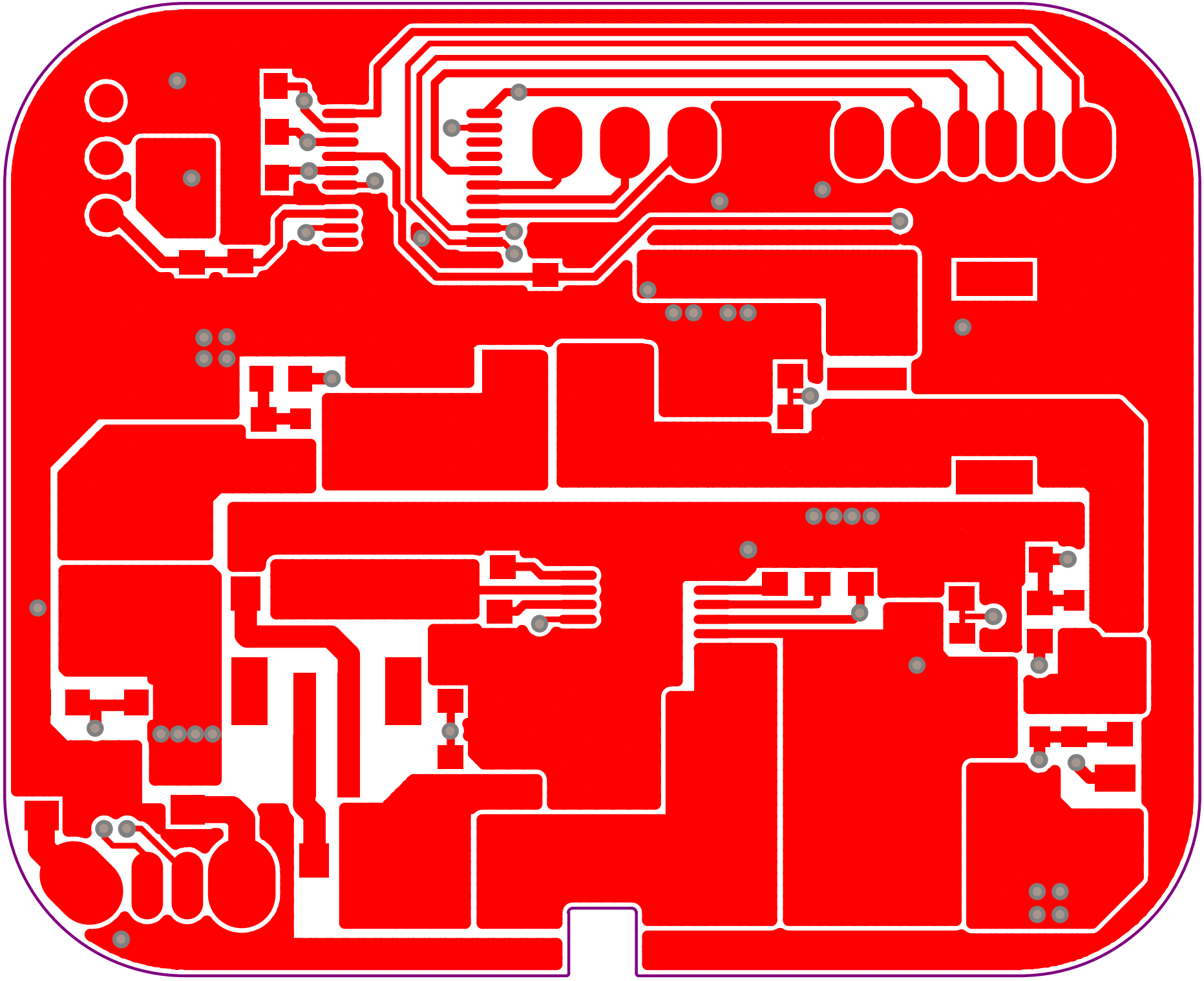

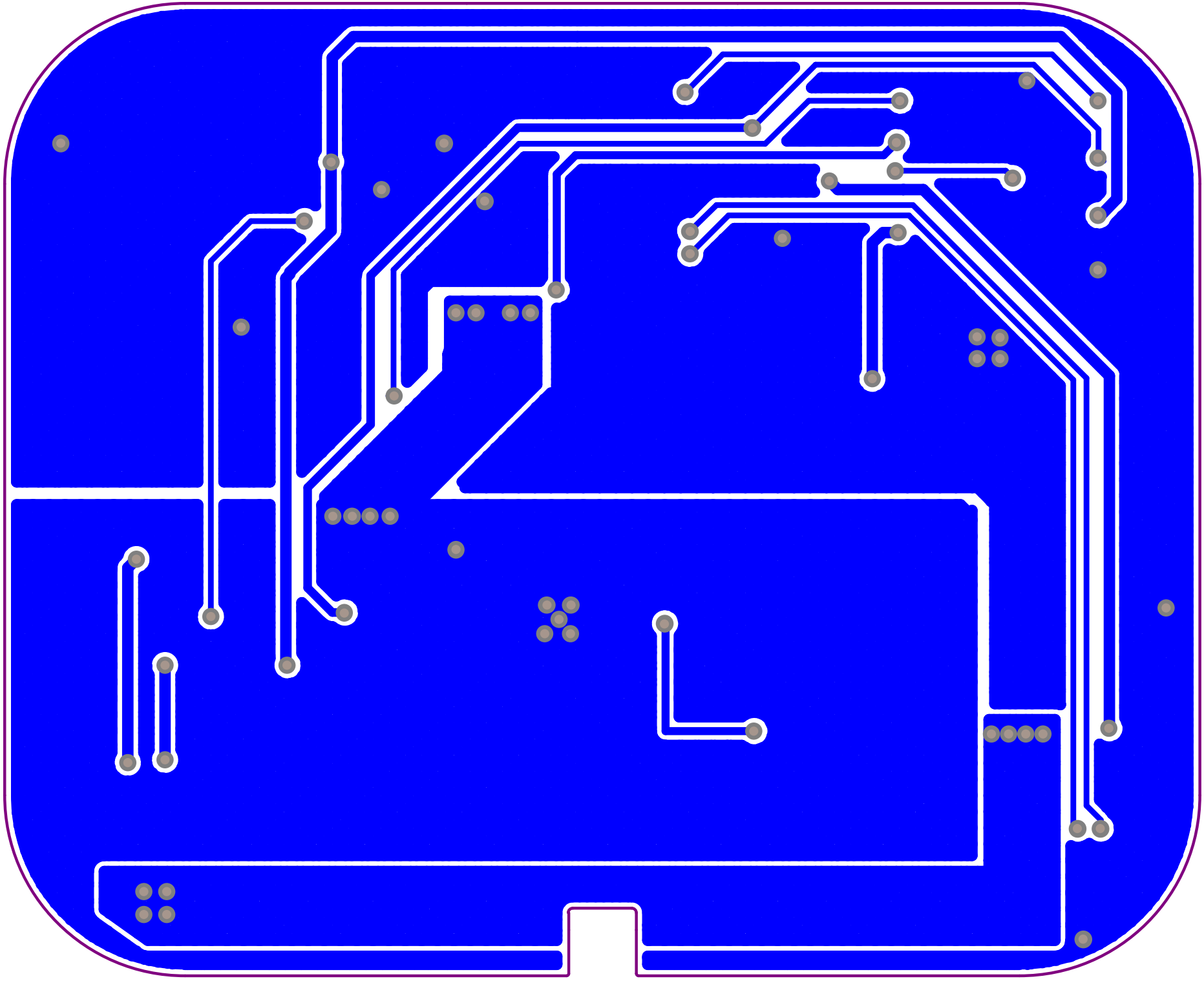

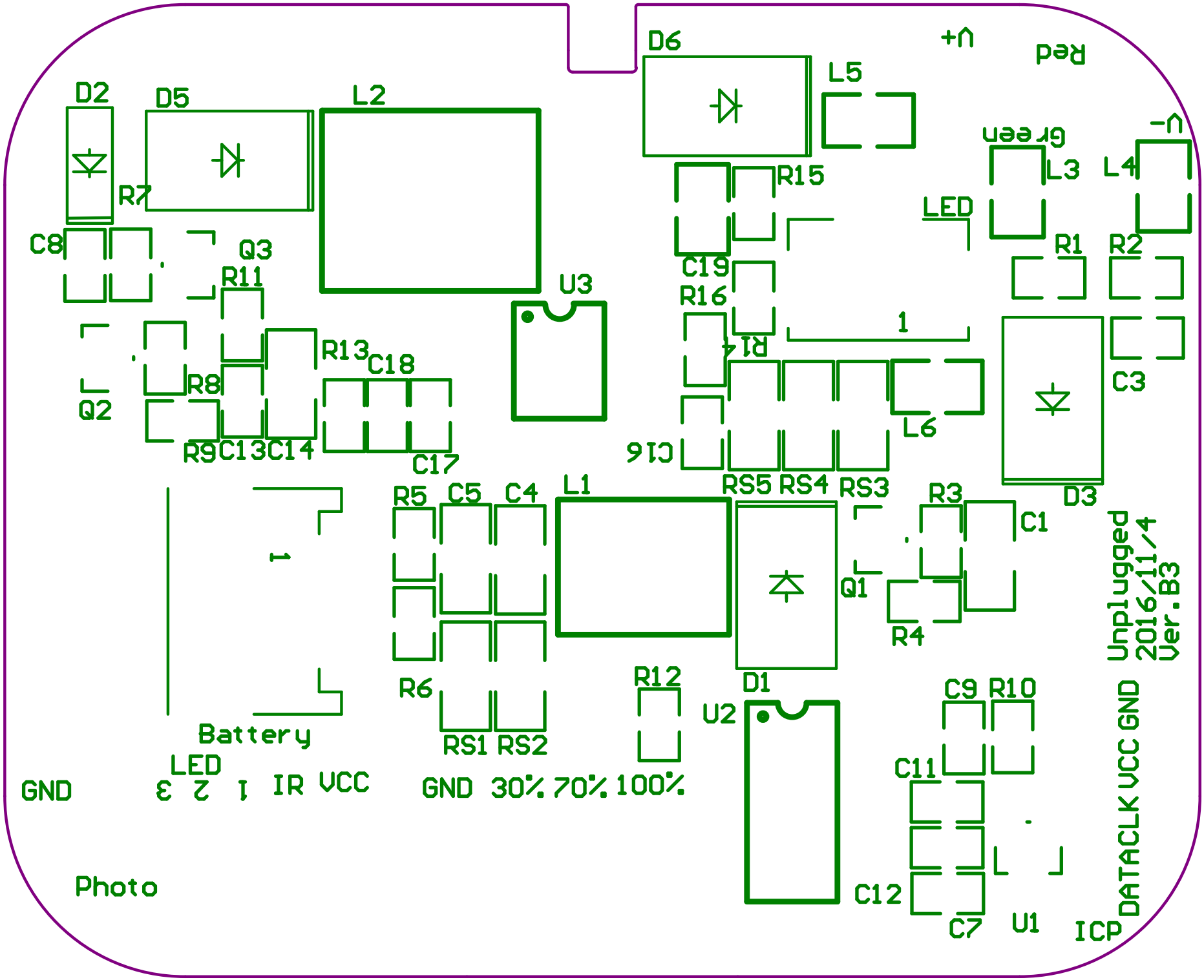
D2
D5
L2
D6
L5
U+
Red
Green
U-
L3
L4
R7
R15
LED
C8
Q3
R11
U3
C19
R16
R1
R2
1
R14
R13
C18
R8
Q2
R9
C13
C14
C17
C16
L6
C3
D3
RS5
RS4
RS3
R5
C5
C4
L1
R3
C1
Q1
R4
Unplugged
2016/11/4
Ver.B3
R6
R12
D1
U2
C9
R10
RS1
RS2
Battery
LED
GND
3
2
1
IR
VCC
GND
30%
70%
100%
C11
C12
C7
U1
ICP
DATACLK
VCC
GND
Photo