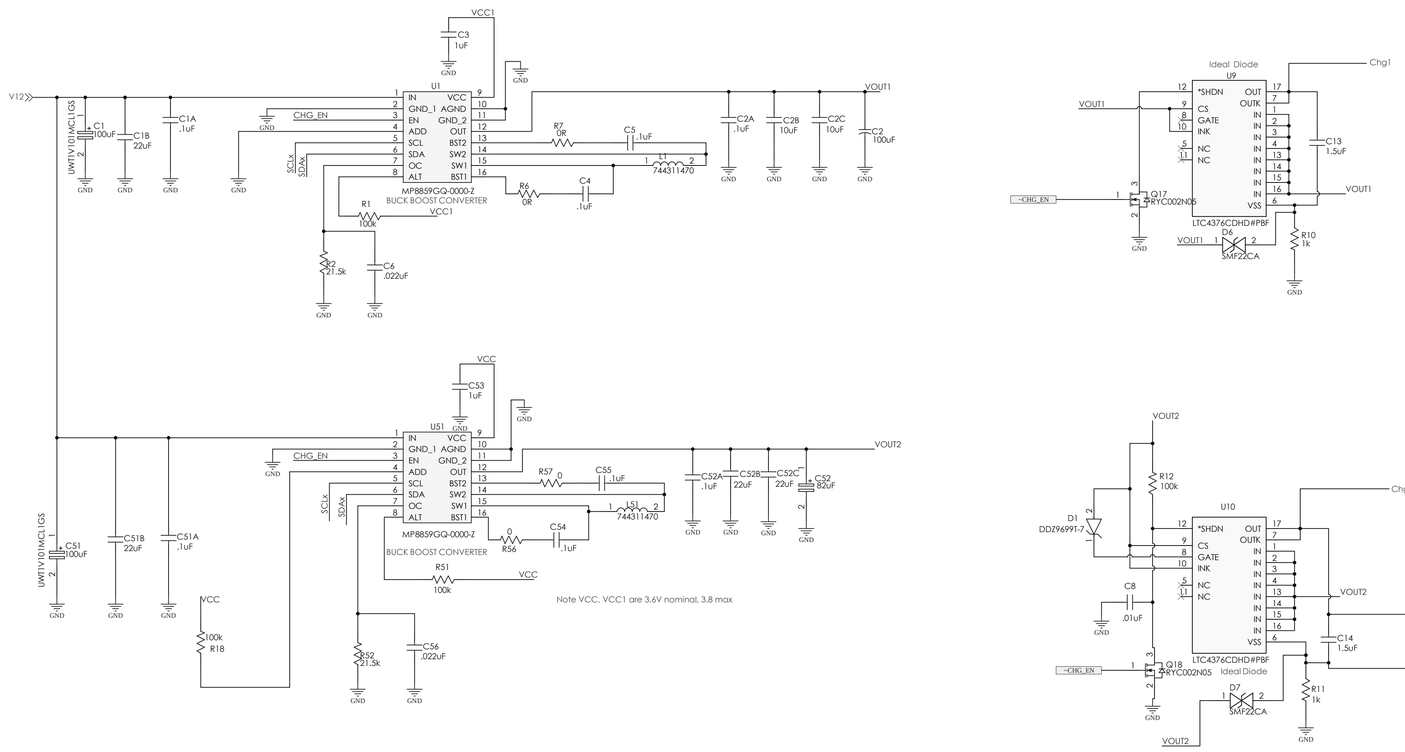
VCC1
C3
1uF
GND
U1
V12
UWT1V101MCL1GS
C1
100uF
C1B
22uF
C1A
.1uF
CHG_EN
IN
GND_1
EN
ADD
SCL
SDA
OC
ALT
VCC
AGND
GND_2
OUT
BST2
SW2
SW1
BST1
MP8859GQ-0000-Z
BUCK BOOST CONVERTER
R7
0R
C5
.1uF
L1
744311470
R6
0R
C4
.1uF
R1
100k
R2
21.5k
C6
.022uF
SCLx
SDAx
C2A
.1uF
C2B
10uF
C2C
10uF
C2
100uF
VOUT1
VCC
C53
1uF
U51
UWT1V101MCL1GS
C51
100uF
C51B
22uF
C51A
.1uF
R57
0
C55
.1uF
L51
744311470
R56
0
C54
.1uF
R51
100k
R18
100k
R52
21.5k
C56
.022uF
C52A
.1uF
C52B
22uF
C52C
22uF
C52
820uF
VOUT2
Note VCC, VCC1 are 3.6V nominal, 3.8 max
Ideal Diode
U9
*SHDN
CS
GATE
INK
NC
NC
OUT
OUTK
IN
VSS
LTC4376CDHD#PBF
Chg1
VOUT1
-CHG_EN
Q17
RYC002N05
D6
SMF22CA
C13
1.5uF
R10
1k
U10
R12
100k
D1
DDZ9699T-7
C8
.01uF
Chg2
VOUT2
Q18
RYC002N05
D7
SMF22CA
C14
1.5uF
D2
S1BFL
R11
1k

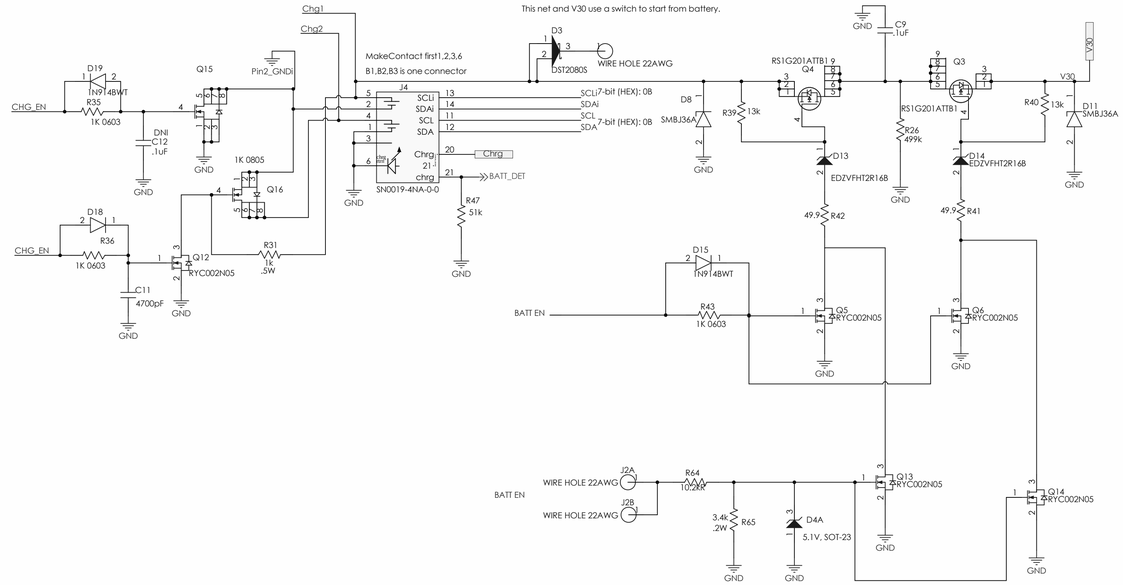
This net and V30 use a switch to start from battery.
Chg1
Chg2
MakeContact first1,2,3,6
B1,B2,B3 is one connector
Pin2_GND
CHG_EN
D19
1N914BWT
R35
1K 0603
DNI
C12
.1uF
Q15
1K 0805
Q16
D18
R36
1K 0603
Q12
RYC002N05
R31
1k
.5W
C11
4700pF
J4
SCLi
SDAi
SCL
SDA
Chrg
chrg
SN0019-4NA-0-0
Chrg
BATT_DET
R47
51k
D3
DST2080S
WIRE HOLE 22AWG
SCLi 7-bit (HEX): 08
SDAi
SCL
SDA 7-bit (HEX): 08
D8
SMBJ36A
R39
13k
RS1G201ATTB1
Q4
D13
ED2VFHT2R16B
49.9
R42
C9
.1uF
R26
499k
Q3
RS1G201ATTB1
D14
ED2VFHT2R16B
49.9
R41
R40
13k
V30
D11
SMBJ36A
D15
1N914BWT
BATT EN
R43
1K 0603
Q5
RYC002N05
Q6
RYC002N05
J2A
WIRE HOLE 22AWG
J2B
WIRE HOLE 22AWG
R64
10.2K
3.4k
.2W
R65
D4A
5.1V, SOT-23
Q13
RYC002N05
Q14
RYC002N05
GND