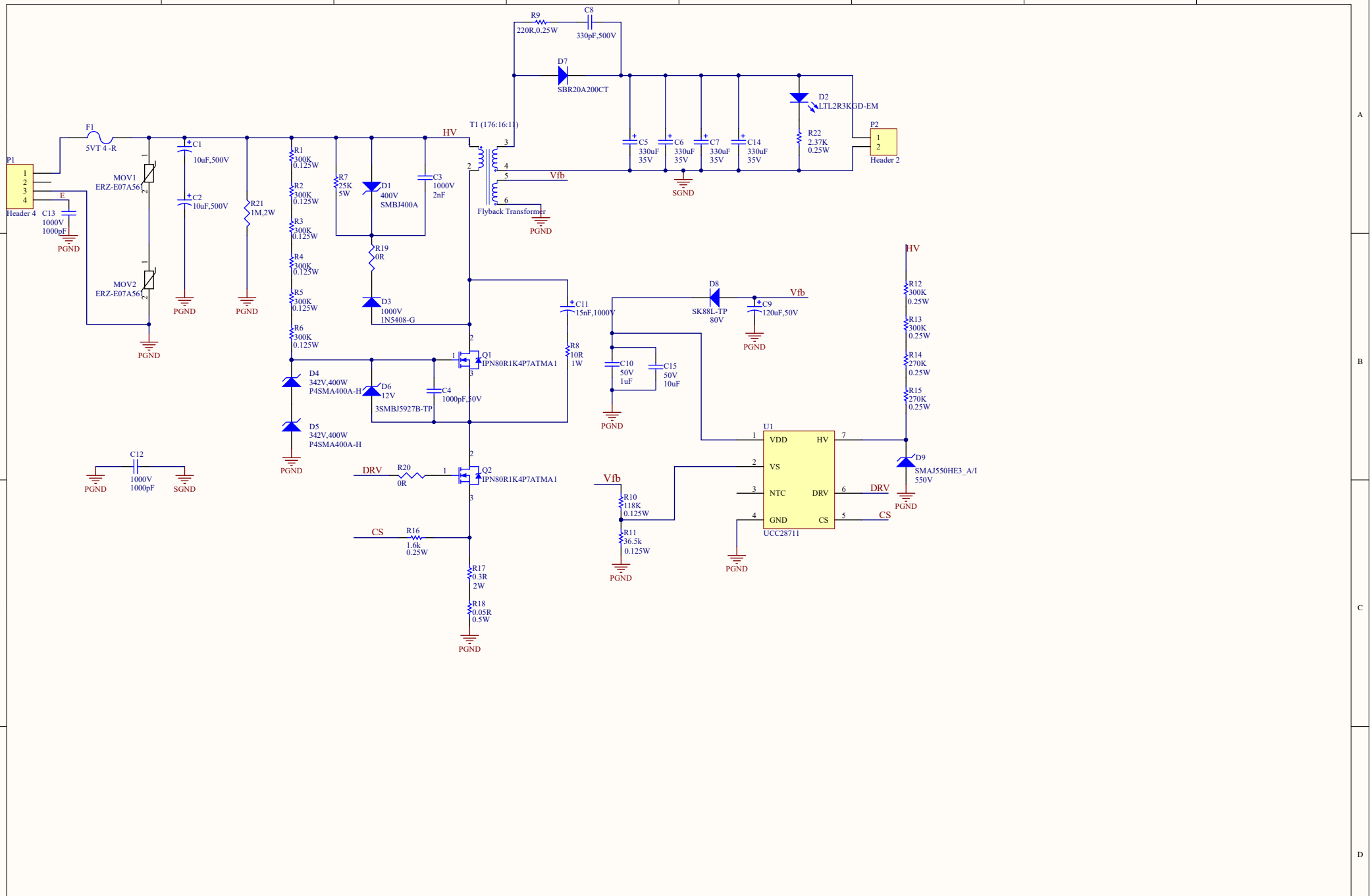

Title *			
Size: A3	Number:*	Revision:*	
Date: 23-04-2018	Time: 16:14:02	Sheet* of *	
File: F:\ECOZEN\Flyback Converter\My design\PCB design\Flyback 1.2\Flyback v1.0.SchDoc			