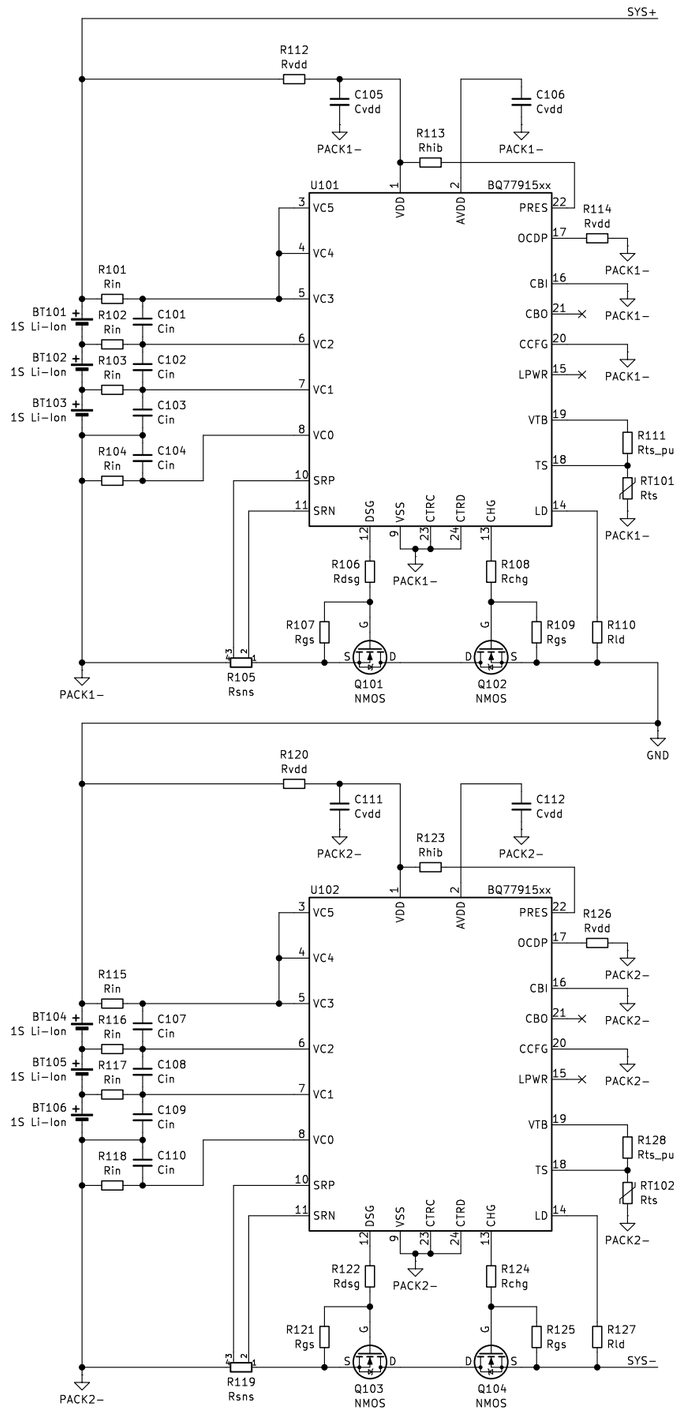

Sheet: /
File: HP419C_BattPack.kicad_sch

Title:

Size: B	Date:	Rev:
KiCad E.D.A. 8.0.5		Id: 1/1