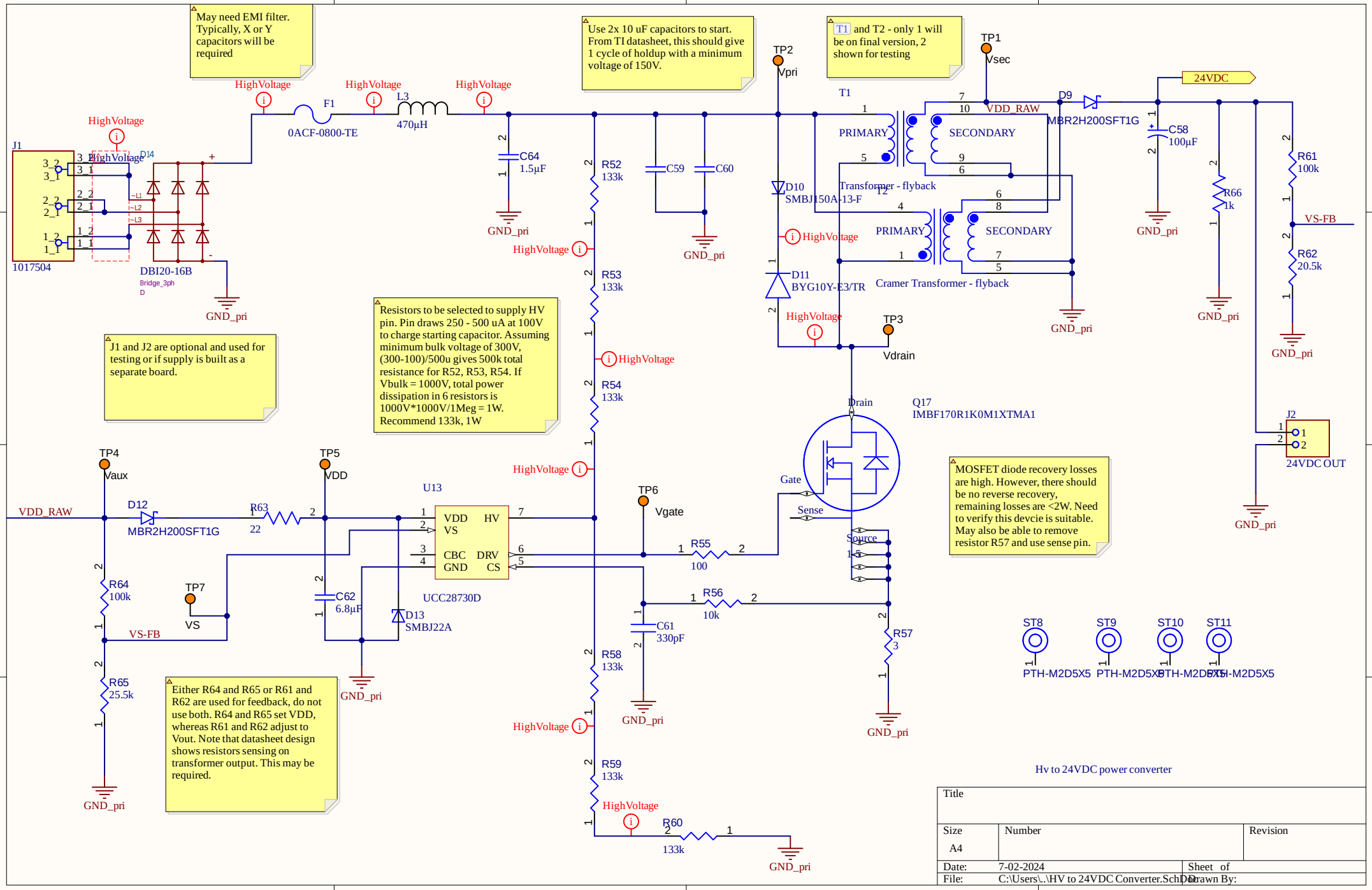
May need EMI filter. Typically, X or Y capacitors will be required
Use 2x 10 uF capacitors to start. From TI datasheet, this should give 1 cycle of holdup with a minimum voltage of 150V.
T1 and T2 - only 1 will be on final version, 2 shown for testing
J1 and J2 are optional and used for testing or if supply is built as a separate board.
Resistors to be selected to supply HV pin. Pin draws 250 - 500 uA at 100V to charge starting capacitor. Assuming minimum bulk voltage of 300V, (300-100)/500u gives 500k total resistance for R52, R53, R54. If Vbulk = 1000V, total power dissipation in 6 resistors is 1000V*1000V/1Meg = 1W. Recommend 133k, 1W
MOSFET diode recovery losses are high. However, there should be no reverse recovery, remaining losses are <2W. Need to verify this devcie is suitable. May also be able to remove resistor R57 and use sense pin.
Either R64 and R65 or R61 and R62 are used for feedback, do not use both. R64 and R65 set VDD, whereas R61 and R62 adjust to Vout. Note that datasheet design shows resistors sensing on transformer output. This may be required.
HighVoltage
F1
0ACF-0800-TE
L3
470µH
C64
1.5µF
GND_pri
J1
1017504
D14
DBI20-16B
Bridge_3ph
D
R52
133k
R53
133k
R54
133k
R58
133k
R59
133k
R60
133k
C59
C60
TP2
Vpri
D10
SMBJ150A-13-F
D11
BYG10Y-E3/TR
T1
PRIMARY
SECONDARY
Transformer - flyback
T2
Cramer Transformer - flyback
TP1
Vsec
VDD_RAW
D9
MBR2H200SFT1G
24VDC
C58
100µF
R66
1k
R61
100k
R62
20.5k
VS-FB
J2
24VDC OUT
TP3
Vdrain
Q17
IMBF170R1K0M1XTMA1
Drain
Gate
Sense
Source
TP4
Vaux
D12
MBR2H200SFT1G
R63
22
TP5
VDD
U13
VDD
VS
CBC
GND
HV
DRV
CS
UCC28730D
C62
6.8µF
D13
SMBJ22A
TP6
Vgate
R55
100
R56
10k
C61
330pF
R57
3
TP7
VS
R64
100k
R65
25.5k
ST8
ST9
ST10
ST11
PTH-M2D5X5
Hv to 24VDC power converter
Title
Size
A4
Number
Revision
Date: 7-02-2024
Sheet of
File: C:\Users\..\HV to 24VDC Converter.SchDoc
Drawn By: