THIS DOCUMENT AND THE DATA DISCLOSED HEREIN OR HEREWITH IS THE PROPERTY OF THE CLIENT AND ANY REPRODUCTION OR OTHER USE WITHOUT CLIENT'S WRITTEN APPROVAL IS PROHIBITED.

BATTERY MANAGER

REVISION	DESCRIPTION	DATE	APPROVED
F	ADDED C1+ TESTPOINT	01/06/22	JBW

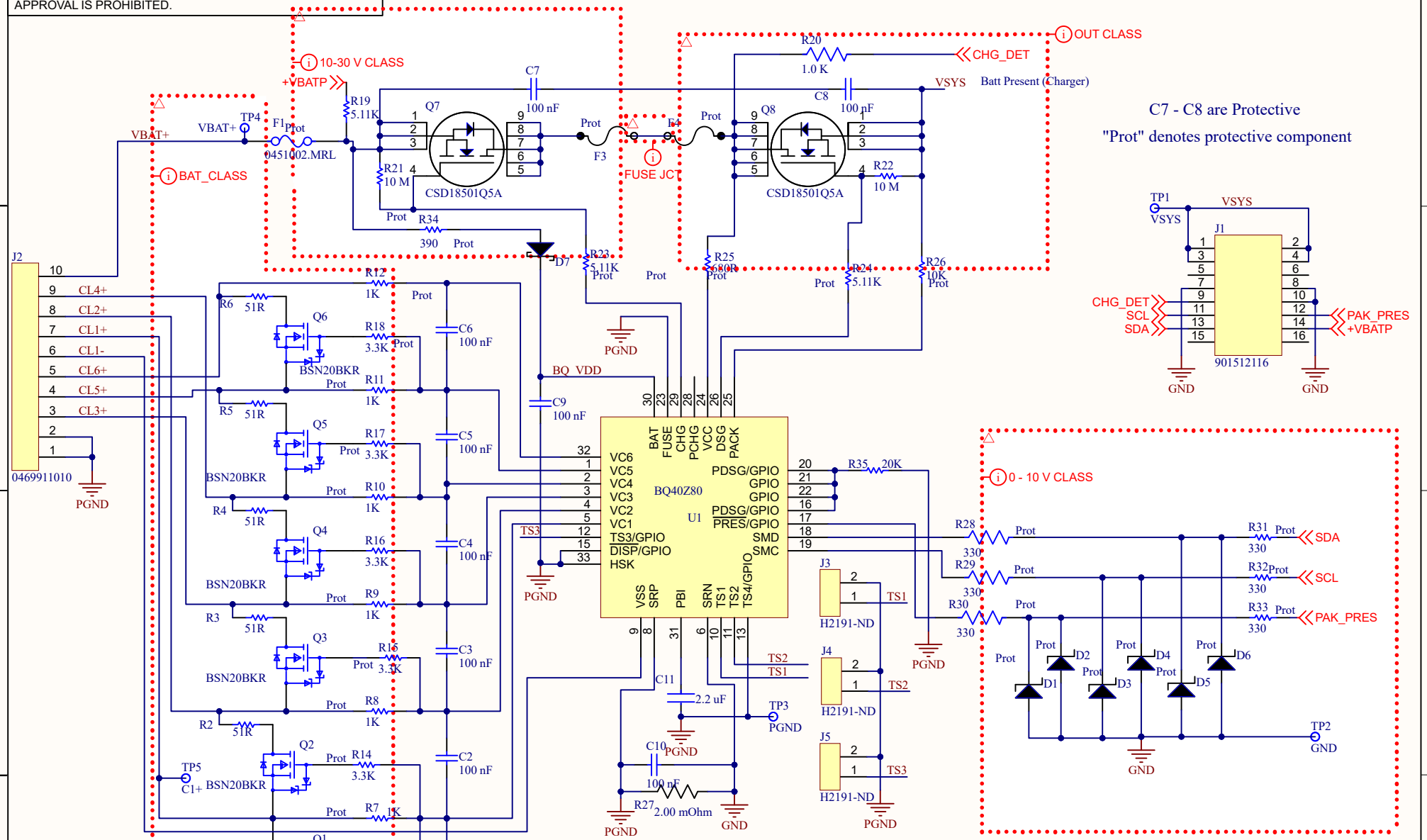

JERRY WEST ·LLC·
610 CLINTON STREET
OVILLA, TX 75154
TEL 855 274-3015
FAX 214 692 5937
www.jwestllc.com

APPROVALS	DATE
ENG: JBW	
DSN: JBW	
CHK: JBW	

REFERENCE DOCUMENTS
BOM:
ASSY DWG:
FAB DWG:
PCB 3D:

CLIENT
ECHOMETER
5001 Ditto Lane
Wichita Falls, TX 76302
USA

TITLE
Model H Battery Manager

SIZE A | DWG NO. HX1030 | REV F

FILE NAME HX1030 Battery Manager Rev F.SchDoc | SHEET 1 OF 1