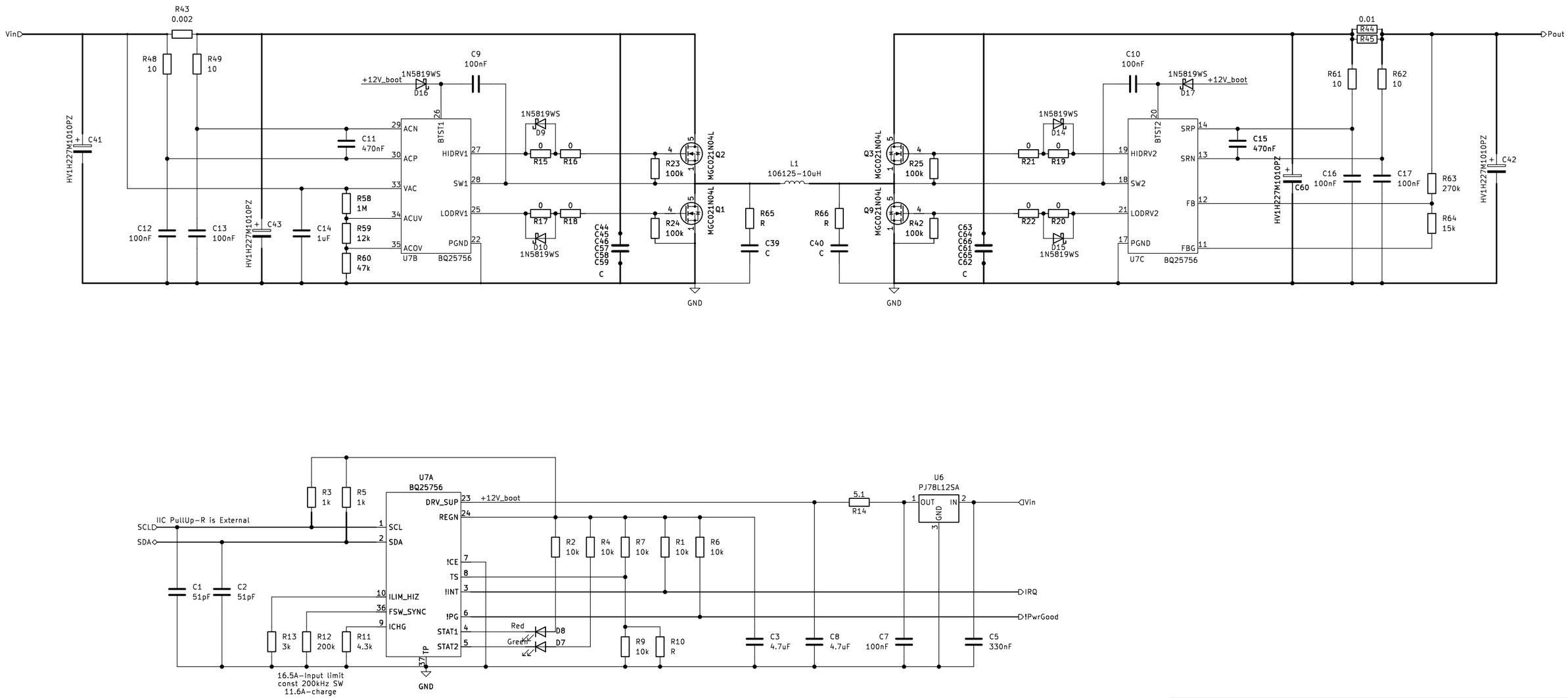

StarLight Dynamic

Sheet: /Charger/
File: Charger.kicad_sch

Title: BatteryCharger

Size: B	Date: 2025-09-02	**Rev: V1.0.0_alpha**
KiCad E.D.A. 8.0.9		Id: 2/2