OFFPAGE

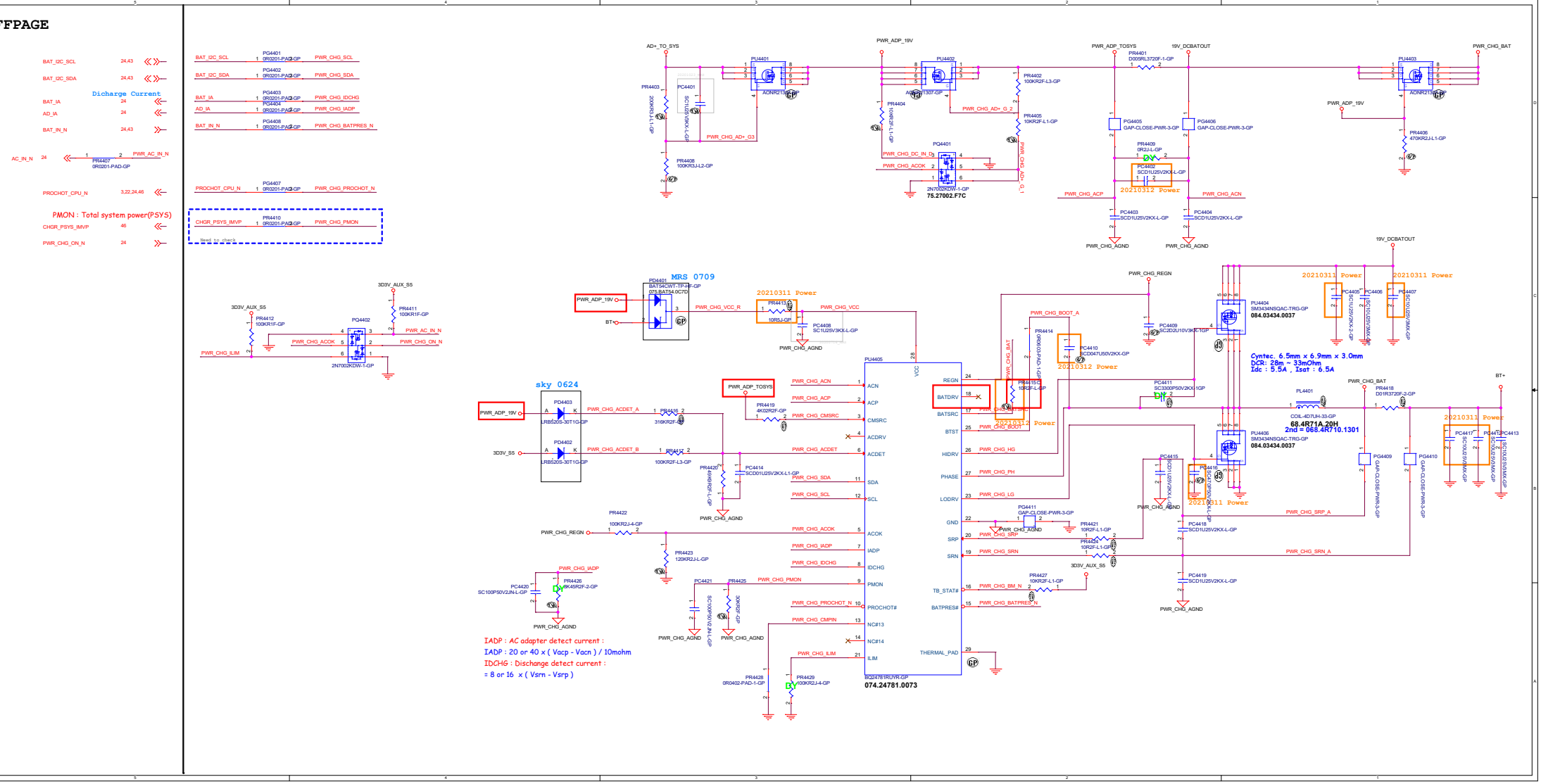
BAT_I2C_SCL 24,43
BAT_I2C_SDA 24,43
Dicharge Current
BAT_IA 24
AD_IA 24
BAT_IN_N 24,43
AC_IN_N 24
PR4407 0R0201-PAD-GP
PWR_AC_IN_N
PROCHOT_CPU_N 3,22,24,46
PMON : Total system power(PSYS)
CHGR_PSYS_IMVP 46
PWR_CHG_ON_N 24
PG4401 0R0201-PAD-GP PWR_CHG_SCL
PG4402 0R0201-PAD-GP PWR_CHG_SDA
PG4403 0R0201-PAD-GP PWR_CHG_IDCHG
PG4404 0R0201-PAD-GP PWR_CHG_IADP
PG4408 0R0201-PAD-GP PWR_CHG_BATPRES_N
PG4407 0R0201-PAD-GP PWR_CHG_PROCHOT_N
PR4410 0R0201-PAD-GP PWR_CHG_PMON
Need 1/2 check
AD+_TO_SYS
PU4401 AONR21307-GP
PR4403 200KR2J-L1-GP
PC4401 SC1U25V3KX-L-GP
PR4408 100KR3J-L2-GP
PWR_CHG_AD+_G3
PWR_ADP_19V
PU4402 AONR21307-GP
PR4402 100KR2F-L3-GP
PR4404 10KR2F-L1-GP
PR4405 10KR2F-L1-GP
PWR_CHG_AD+_G_2
PWR_CHG_AD+_G_1
PQ4401 2N7002KDW-1-GP
75.27002.F7C
PWR_CHG_DC_IN_D
PWR_CHG_ACOK
PWR_ADP_TOSYS
19V_DCBATOUT
PR4401 D005RL3720F-1-GP
PG4405 GAP-CLOSE-PWR-3-GP
PG4406 GAP-CLOSE-PWR-3-GP
PR4409 0R2J-L-GP
PC4402 SCD1U25V2KX-L-GP
20210312 Power
PWR_CHG_ACP
PWR_CHG_ACN
PC4403 SCD1U25V2KX-L-GP
PC4404 SCD1U25V2KX-L-GP
PWR_CHG_AGND
PU4403 AONR21307-GP
PWR_CHG_BAT
PR4406 470KR2J-L1-GP
3D3V_AUX_S5
PR4412 100KR1F-GP
PR4411 100KR1F-GP
PQ4402 2N7002KDW-1-GP
PWR_CHG_ILIM
PWR_CHG_ACOK
PWR_AC_IN_N
PWR_CHG_ON_N
MRS 0709
PD4401 BAT54CWT-TP-HF-GP 075.BAT54.0CTD
PWR_ADP_19V
BT+
PWR_CHG_VCC_R
PR4413 10R5J-GP
20210311 Power
PC4408 SC1U25V3KX-L-GP
PWR_CHG_VCC
PU4405
VCC
28
REGN
BATDRV
BATSRC
BTST
HIDRV
PHASE
LODRV
GND
SRP
SRN
TB_STAT#
BATPRES#
THERMAL_PAD
ACN
ACP
CMSRC
ACDRV
ACDET
SDA
SCL
ACOK
IADP
IDCHG
PMON
PROCHOT#
NC#13
NC#14
ILIM
BQ24781RUYR-GP
074.24781.0073
sky 0624
PD4403 LRB520S-30T1G-GP
PD4402 LRB520S-30T1G-GP
PWR_ADP_19V
3D3V_S5
PWR_CHG_ACDET_A
PWR_CHG_ACDET_B
PR4416 316KR2F-GP
PR4417 100KR2F-L3-GP
PR4419 4K02R2F-GP
PR4420 8M9R2F-L-GP
PC4414 SCD01U25V2KX-L1-GP
PWR_CHG_ACN
PWR_CHG_ACP
PWR_CHG_CMSRC
PWR_CHG_ACDET
PWR_CHG_SDA
PWR_CHG_SCL
PWR_CHG_ACOK
PWR_CHG_IADP
PWR_CHG_IDCHG
PWR_CHG_PMON
PWR_CHG_PROCHOT_N
PWR_CHG_CMPIN
PWR_CHG_ILIM
PR4422 100KR2J-4-GP
PWR_CHG_REGN
PR4423 120KR2J-L-GP
PC4421 SC100P50V2JN-L-GP
PR4425 30KR2F-GP
PR4428 0R0402-PAD-1-GP
PR4429 100KR2J-4-GP
PC4420 SC100P50V2JN-L-GP
PR4426 8K45R2F-2-GP
PWR_CHG_AGND
IADP : AC adapter detect current :
IADP : 20 or 40 x (Vacp - Vacn) / 10mohm
IDCHG : Dischange detect current :
= 8 or 16 x (Vsrn - Vsrp)
PWR_CHG_BOOT_A
PR4414 0R0402-PAD-1-GP
PC4410 SCD047U50V2KX-GP
PR4415 10R2F-L-GP
PWR_CHG_BOOT
PC4411 SC3300P50V2KX-1GP
DNP
PC4409 SCZ0ZU10V3KX-1GP
PU4404 SM3434NSQAC-TRG-GP 084.03434.0037
PU4406 SM3434NSQAC-TRG-GP 084.03434.0037
Cyntec 6.5mm x 6.9mm x 3.0mm
DCR: 28m ~ 33mOhm
Idc : 5.5A , Isat : 6.5A
PL4401 COIL-4D7UH-33-GP
68.4R71A.20H
2nd = 068.4R710.1301
PR4418 D01R3720F-2-GP
PC4415 SCD1U25V2KX-L-GP
PC4416 SCD47U25V2KX-L-GP
PC4418 SCD1U25V2KX-L-GP
PC4419 SCD1U25V2KX-L-GP
PG4411 GAP-CLOSE-PWR-3-GP
PR4421 10R2F-L1-GP
PR4424 10R2F-L1-GP
PR4427 10KR2F-L1-GP
PWR_CHG_SRP
PWR_CHG_SRN
PWR_CHG_BM_N
PWR_CHG_BATPRES_N
PWR_CHG_SRP_A
PWR_CHG_SRN_A
PC4405 SC1U25V2KX-L-GP
PC4406 SC1U25V2KX-L-GP
PC4407 SC10U25V3MX-GP
PG4409 GAP-CLOSE-PWR-3-GP
PG4410 GAP-CLOSE-PWR-3-GP
PC4417 SC10U25V3MX-GP
PC4413 SC10U25V3MX-GP