STEP UP/DOWN 12v

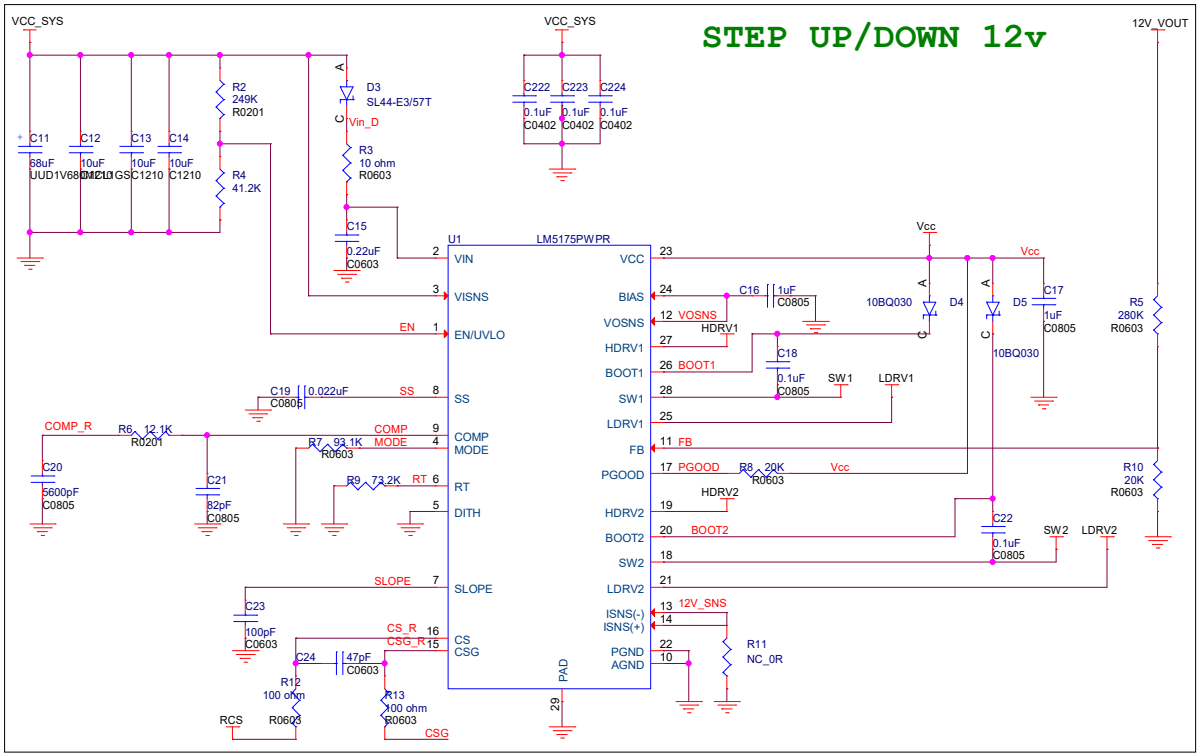

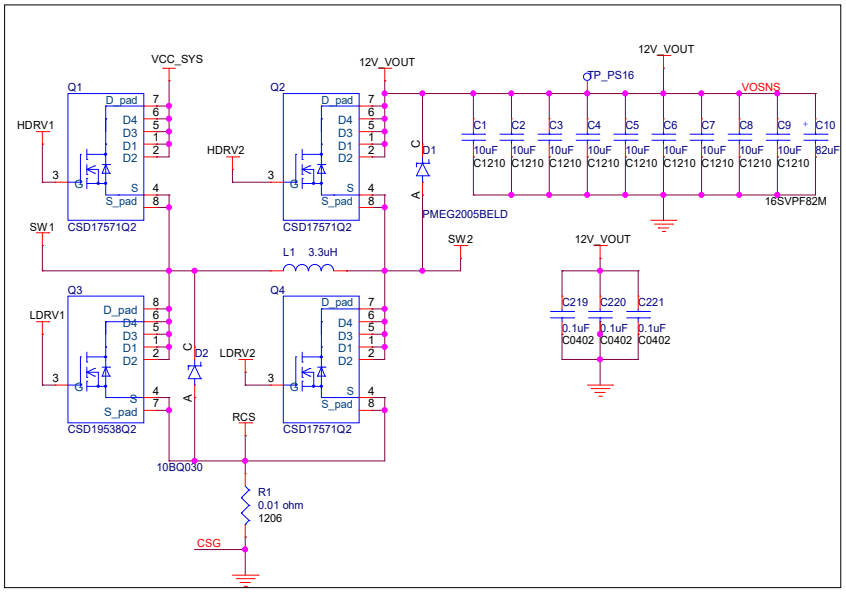

IOwnTdesign	Design Title	Move carrier	
	Schematic name	IOWNT_PCBA200112_MOVE	
	Page Title	<Page>	
	Author: Tzachi B.	Approved by:	<Approved>
	Size:A3	Doc. Number:	Rev: 00
	Date: Wednesday, May 20, 2020	Sheet 6	of 20