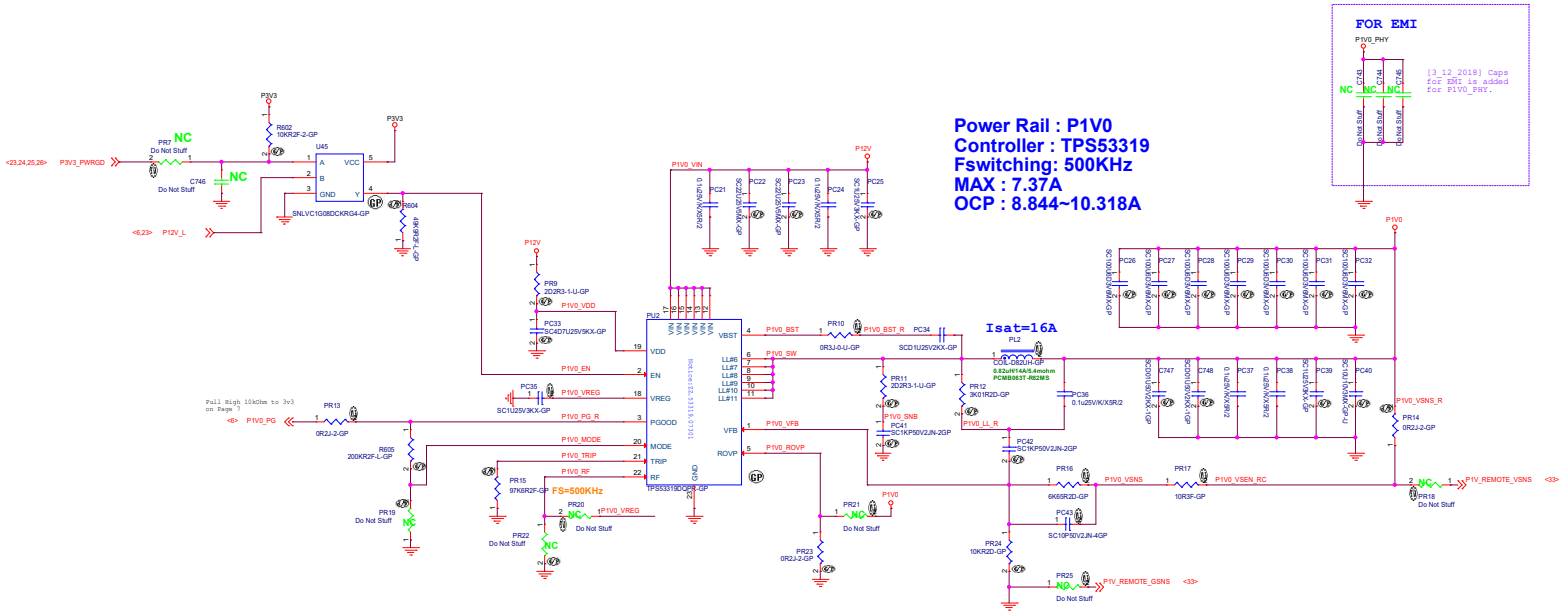

MODE SELECTION	ACTION	SOFT-START TIME(ms)	
RMODE(kΩ)			
Auto Skip	Pull to GND	0.7	39
		1.4	100
		2.8	200
		5.6	475
Forced CCM	Connect to PGOOD	0.7	39
		1.4	100
		2.8	200
		5.6	475

Table 2. Resistor and Switching Frequency

RESISTOR (R_{RF}) CONNECTIONS		SWITCHING FREQUENCY (f_{SW}) (kHz)
VALUE (kΩ)	CONNECT TO	
0	GND	250
187	GND	300
619	GND	400
OPEN	n/a	500
866	VREG	650
309	VREG	750
124	VREG	850
0	VREG	970
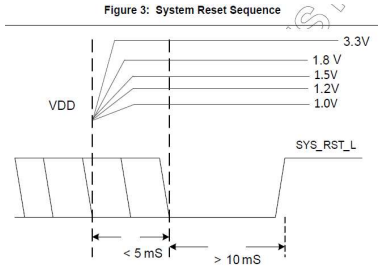
Figure 3: System Reset Sequence