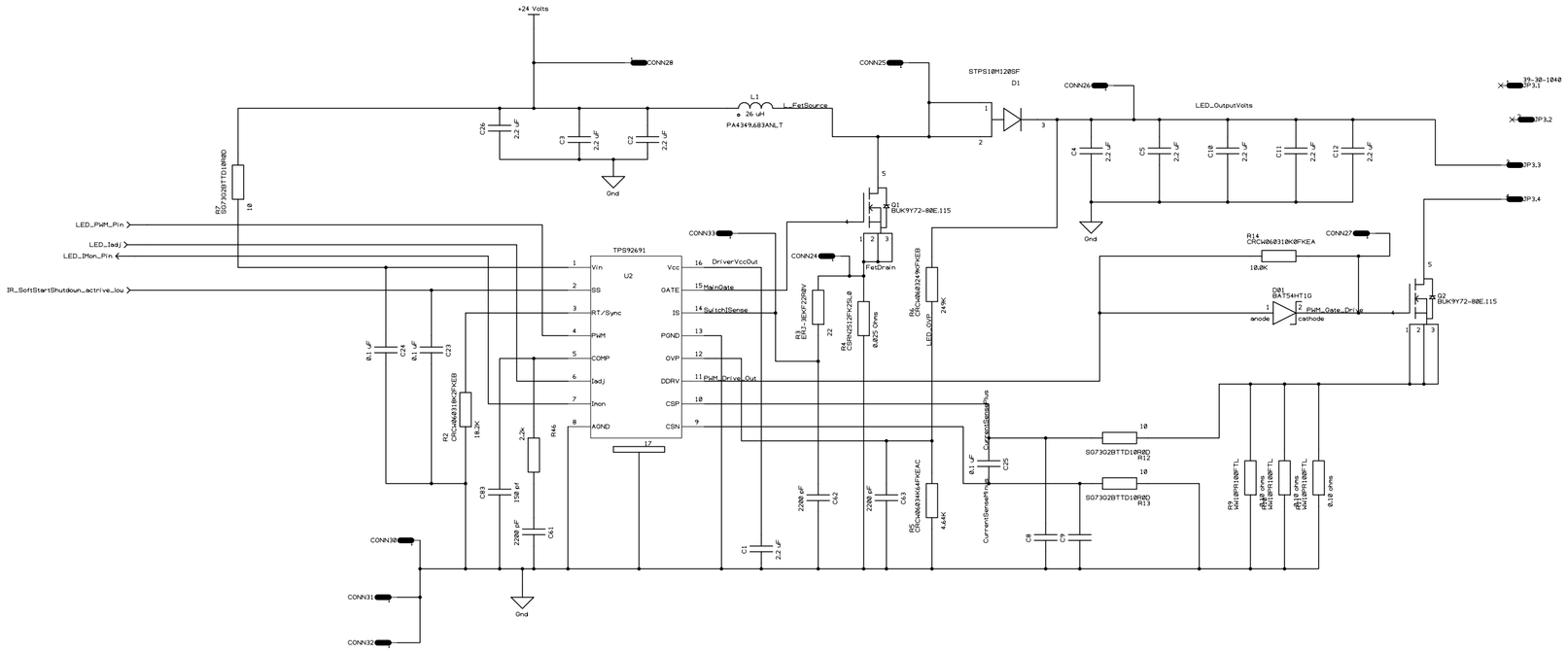
+24 Volts
CONN28
L1
26 uH
PA4349.683ANL.T
L_FetSource
C26
2.2 uF
C3
2.2 uF
C2
2.2 uF
Gnd
R7
SO7302BTTD10RWD
10
CONN25
STPS10M120SF
D1
CONN26
LED_OutputVolts
C4
2.2 uF
C9
2.2 uF
C10
2.2 uF
C11
2.2 uF
C12
2.2 uF
99-30-1040
JP3.1
JP3.2
JP3.3
JP3.4
Q1
BUK9Y72-80E.115
LED_PWM_Pin
LED_Iadj
LED_IMon_Pin
IR_SoftStartShutdown_active_low
CONN33
CONN24
FetDrain
TPS92691
U2
Vin
SS
RT/Sync
PWM
COMP
Iadj
Imon
AGND
Vcc
GATE
IS
PGND
OVP
DDRV
CSP
CSN
DriverVccOut
MainGate
SwitchSense
PWM_Drive_Out
R3
ERJ-3EKF2200V
22
R5
CRCW2512FK25L0
0.025 Ohms
R6
CRCW0603249KFKEB
249K
LED_OVP
R14
CRCW060310K0FKEA
10.0K
CONN27
D81
BAT54HT1G
anode
cathode
PWM_Gate_Drive
Q2
BUK9Y72-80E.115
C24
0.1 uF
C23
0.1 uF
R2
CRCW0603180KFKEB
180K
R46
2.2k
C83
150 pf
C61
2200 uF
CONN30
CONN31
CONN32
C1
2.2 uF
C62
2200 uF
C63
2200 uF
R8
CRCW0603464KFKEAC
464K
CurrentSensePlus
CurrentSenseMinus
C25
0.1 uF
C8
C7
SO7302BTTD10RWD
R12
SO7302BTTD10RWD
R13
R9
WR1MPR100FTL
0.10 ohms
R10
WR1MPR100FTL
0.10 ohms
R11
WR1MPR100FTL
0.10 ohms
0.10 ohms