ODU_Flex_connector

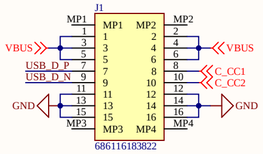

USB_C_connector

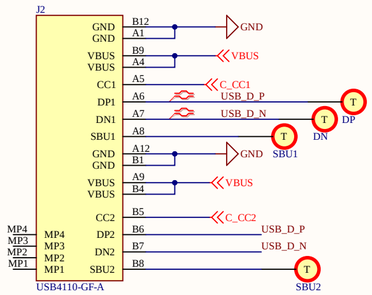

USB C 3.0 PD controller

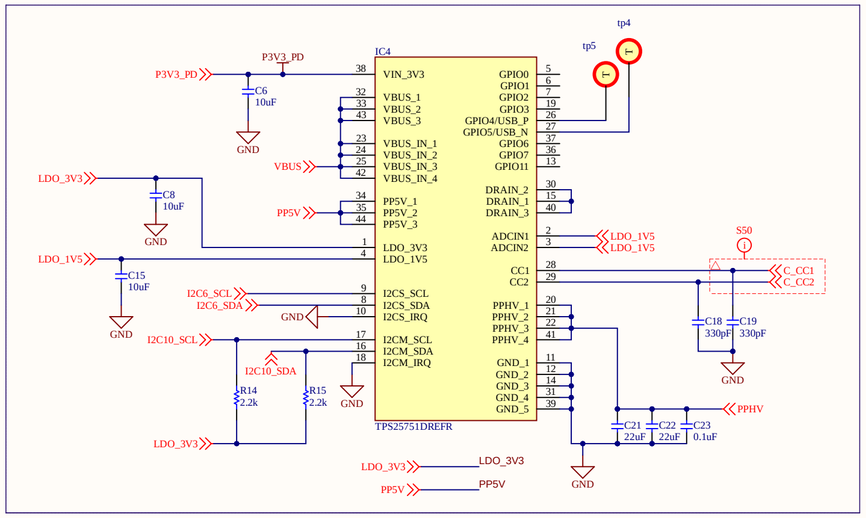

Main batteries switch

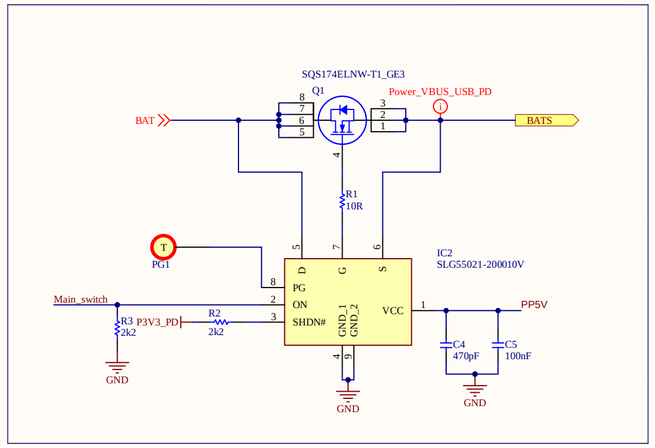

3S Battery charger

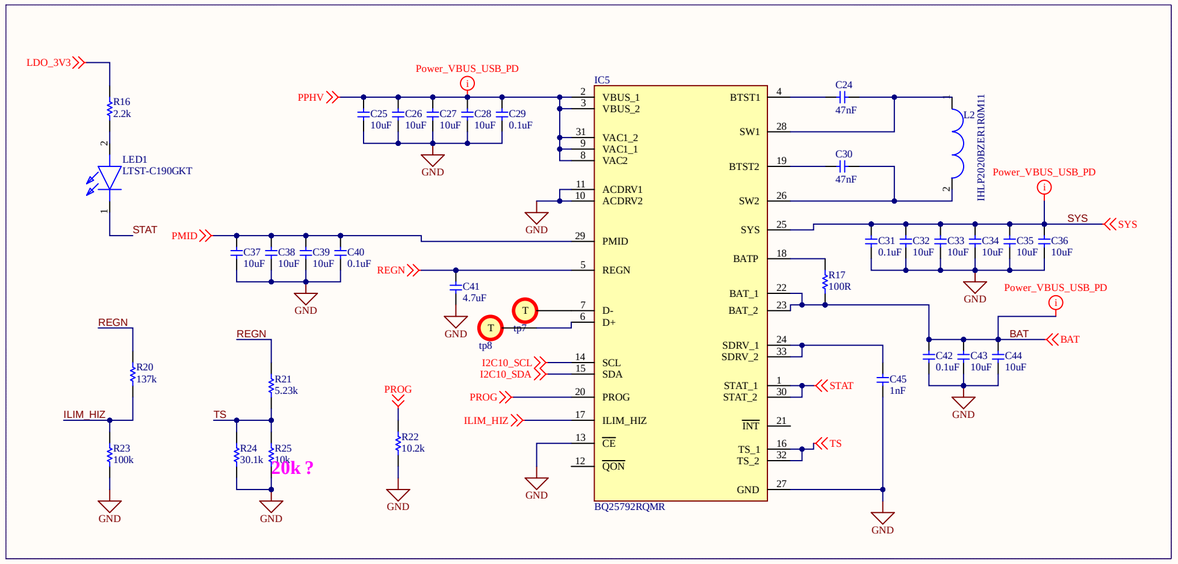

Mires

MP1
MP2
MP3

EEPROM - I2C Programming
USB C 3.0 PD controller - I2C slave

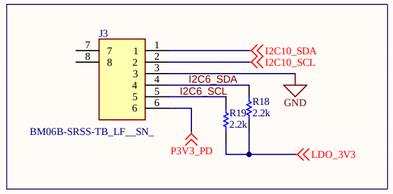

EEPROM

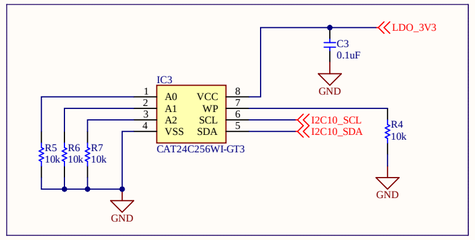

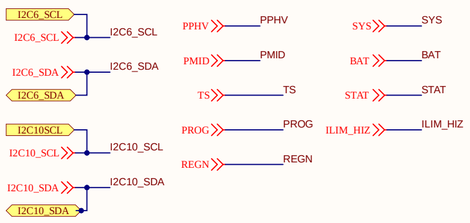

+5V/5A USB C sourcing & local power supply

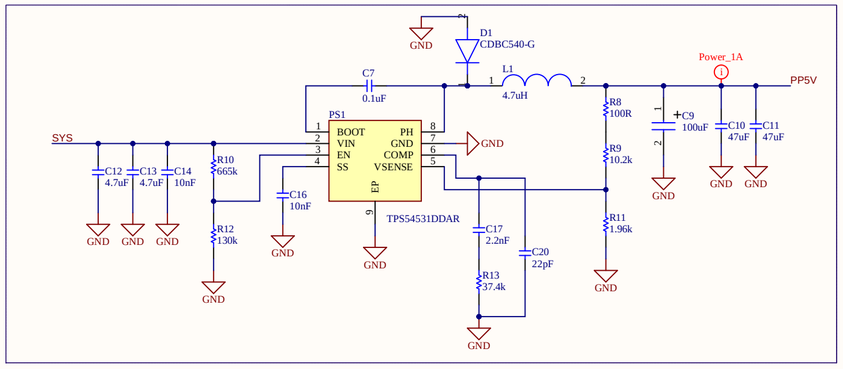

USB controller local power supply

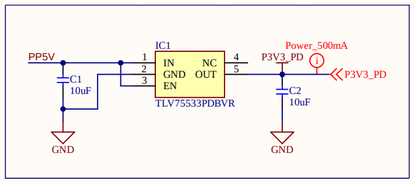

Title		
Size A2	Number	Revision
Date: 10/23/2025	Sheet of	
File: C:\PROJETS\..\Sheet7.SchDoc	Drawn By:	

Connecteur Debug + Alim uC

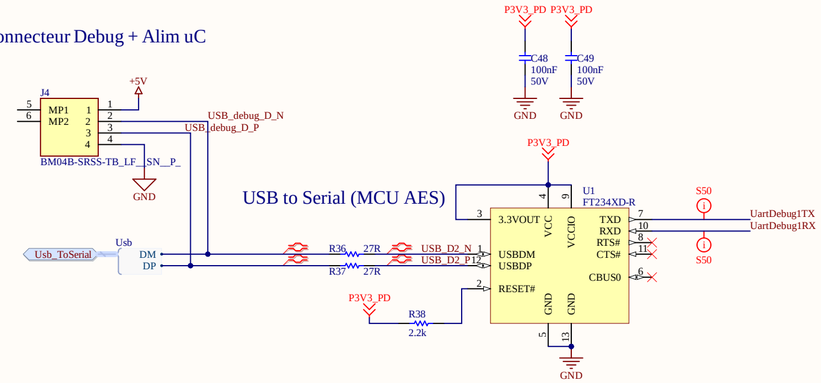

+3V3 MCU + diode idéale

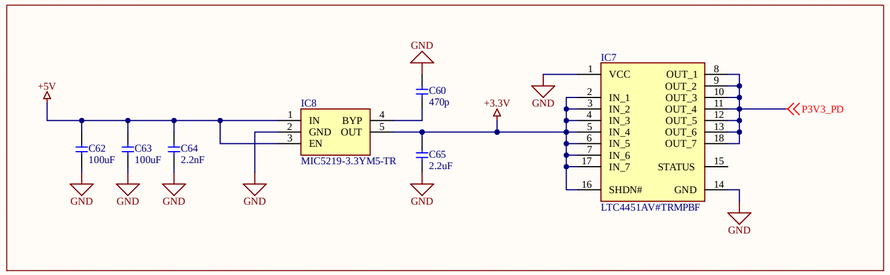

I2C Multiplexeur

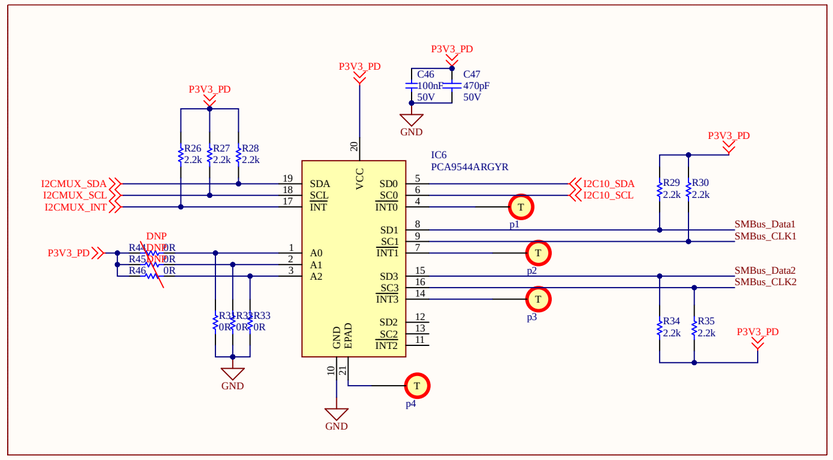

Connecteur Prog MCU

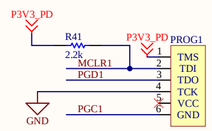

Connecteur Flex

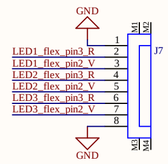

MCU

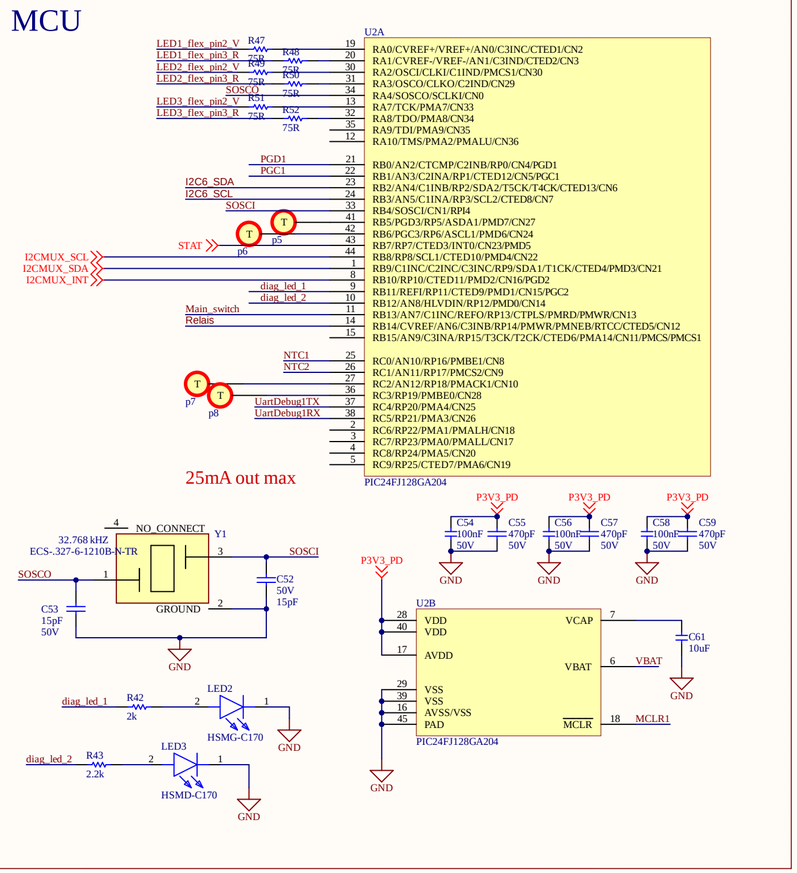

Relais choix batterie + connecteurs

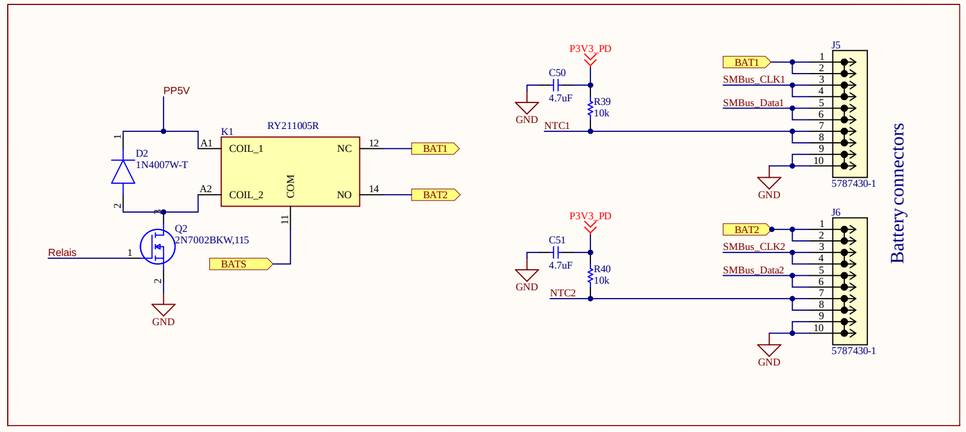

Title		
Size A2	Number	Revision
Date: 10/23/2025	Sheet of	
File: C:\PROJETS\..\Sheet8.SchDoc	Drawn By:	