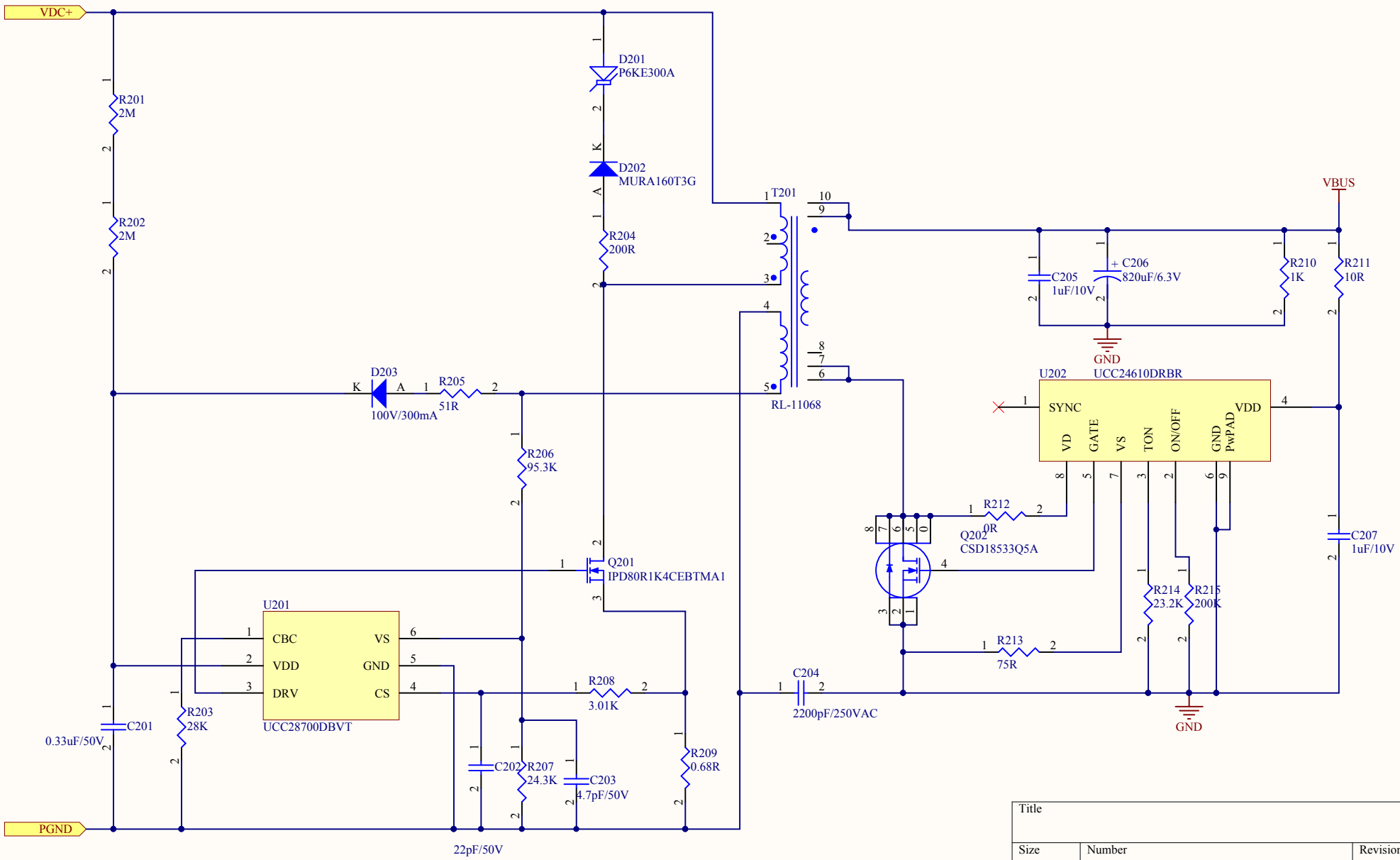

Title		
Size A4	Number	Revision
Date: 4/4/2017		Sheet of
File: D:\projects\..\Konexus_flyBack.SchDoc		Drawn By: