LCD POWER FOR balcklight

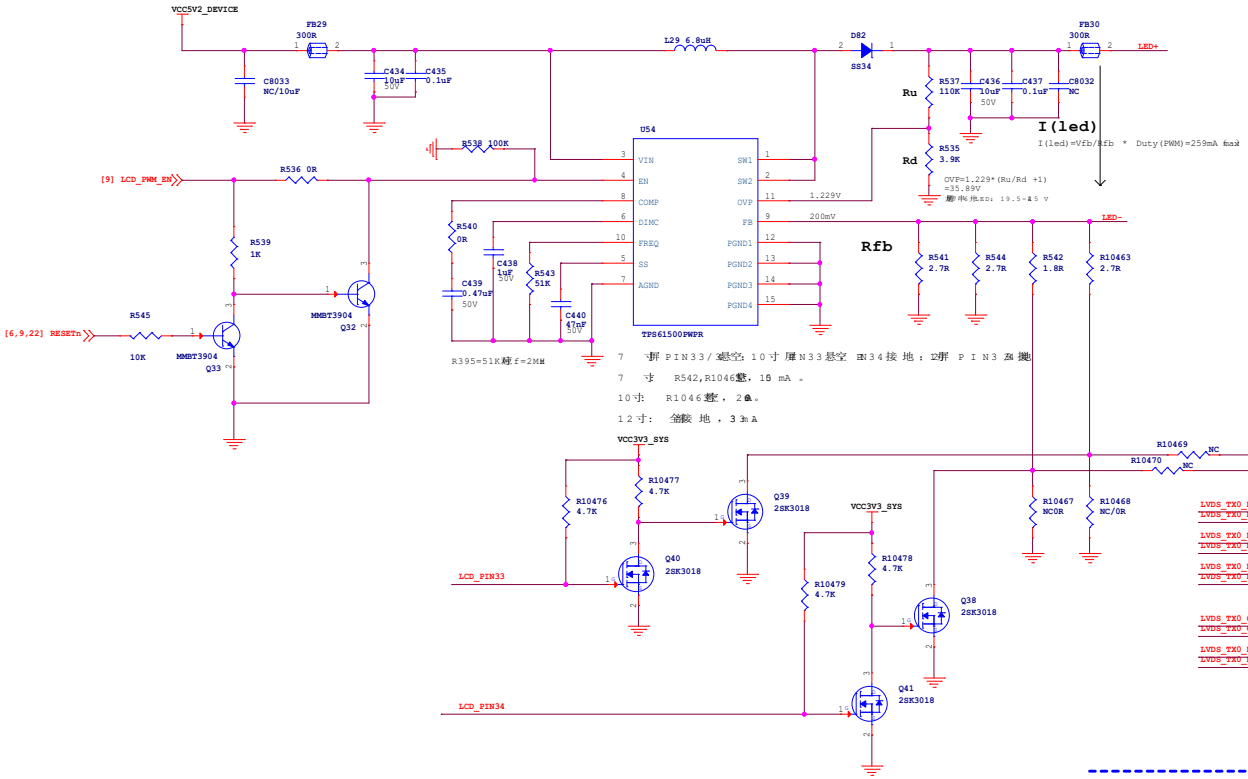

7 inch TP&LCD

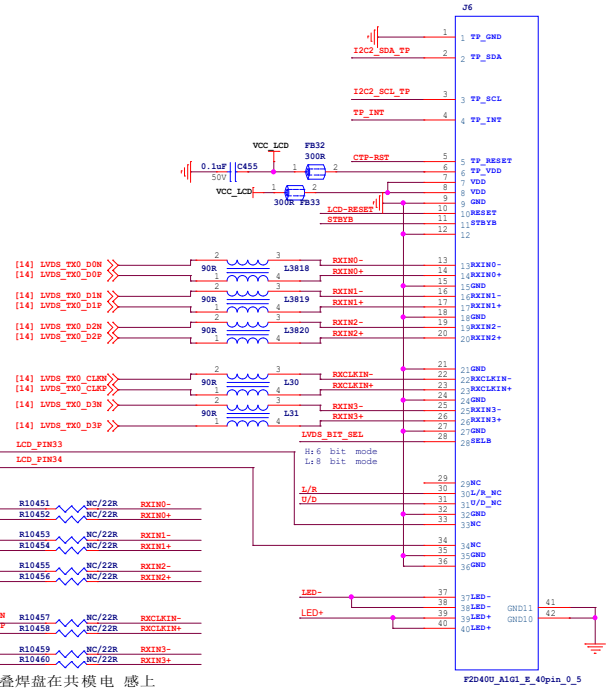

叠焊盘在共模电 感上

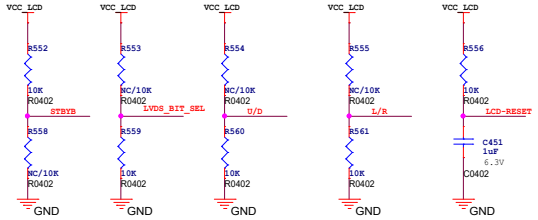

TP&LCD_PWR EN

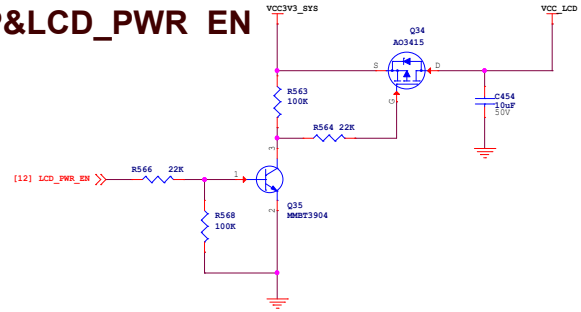

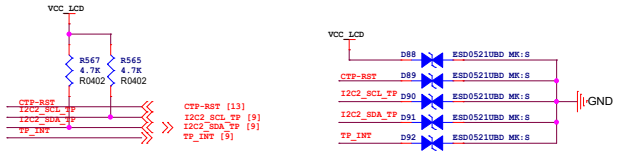

Title	CP022_MAIN_BOARD_V1.0	
Size C	Document Number LCD_CON	Rev V1.0
Date: Monday, November 07, 2022	Sheet 29 of 29	