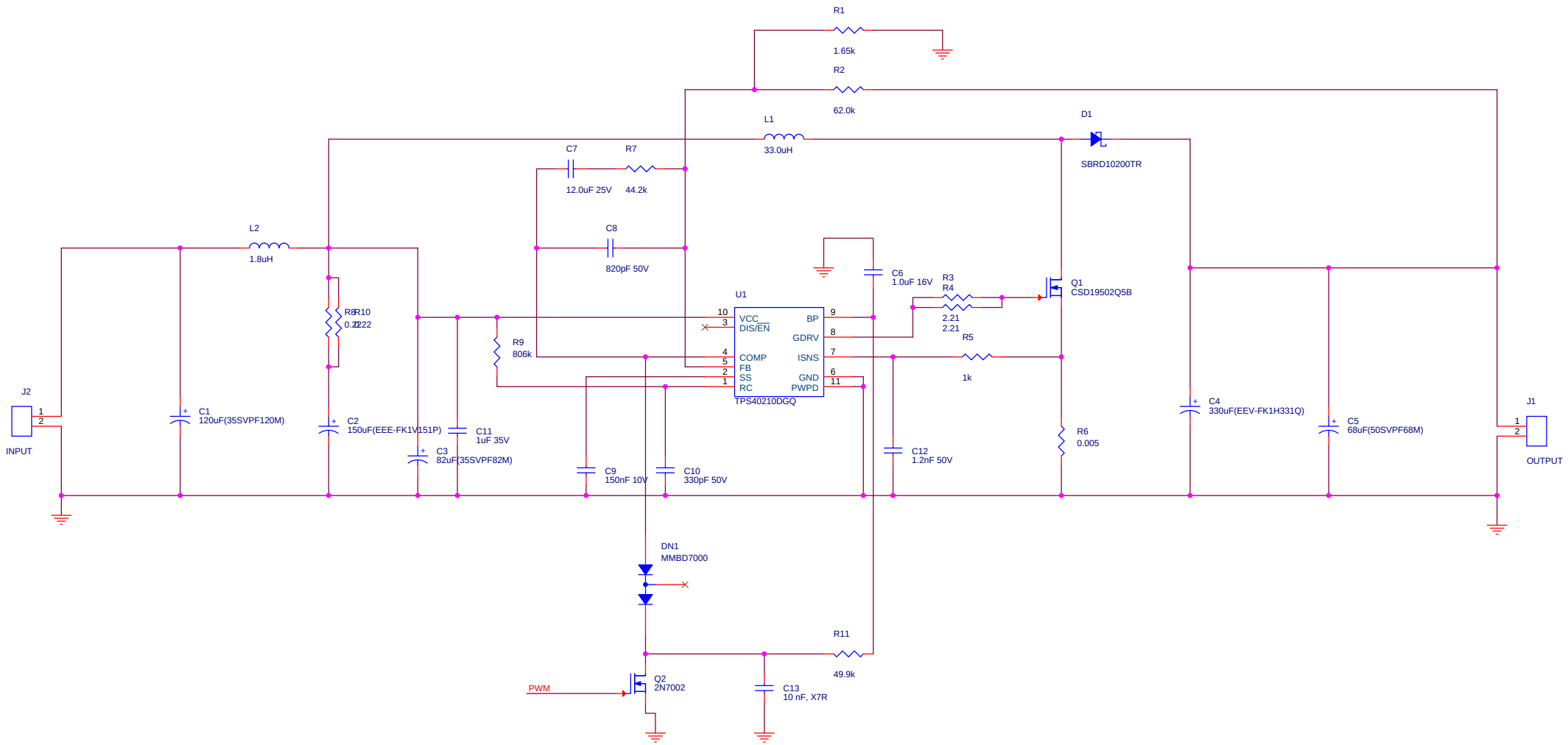

Title	<Title>	
Size A3	Document Number <Doc>	Rev <RevCode>
Date: Tuesday, January 14, 2020	Sheet 1 of 1	