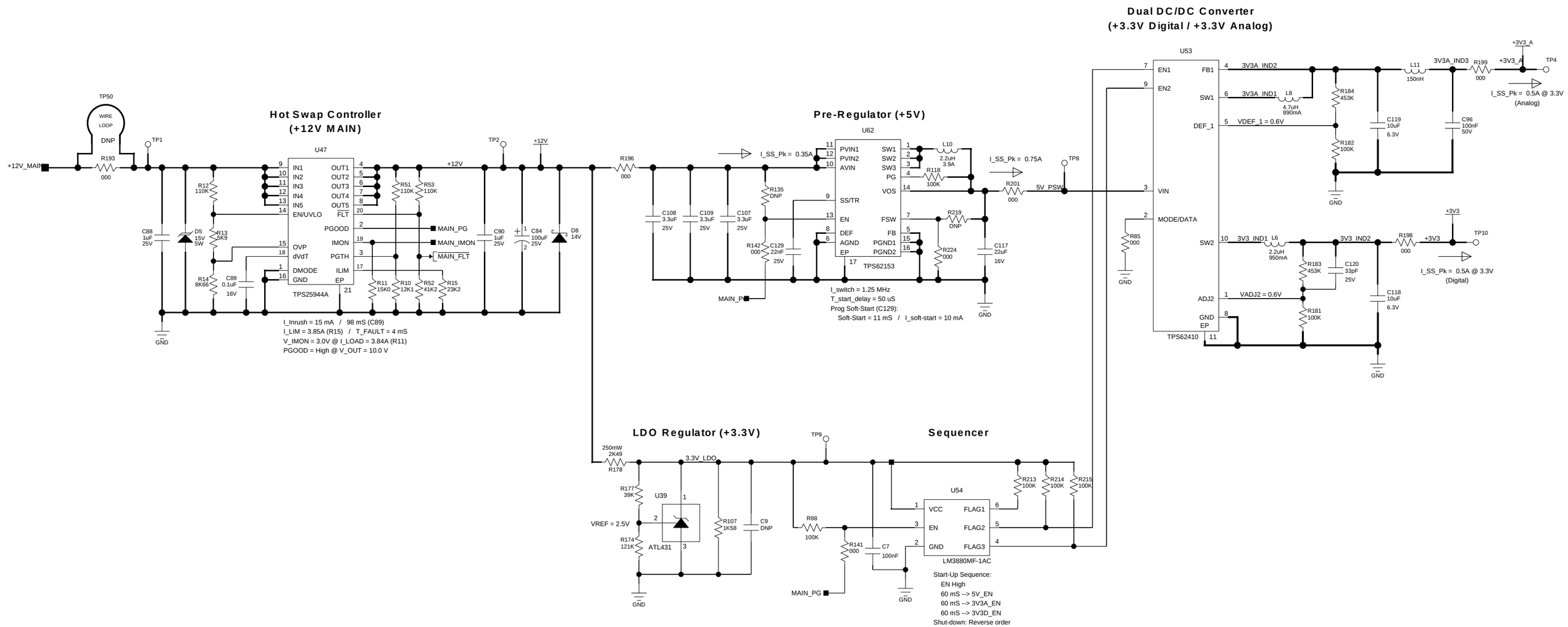
Hot Swap Controller
(+12V MAIN)
U47
TPS25944A
IN1
IN2
IN3
IN4
IN5
EN/UVLO
OVP
dVdT
DMODE
GND
OUT1
OUT2
OUT3
OUT4
OUT5
FLT
PGOOD
IMON
PGTH
ILIM
EP
MAIN_PG
MAIN_IMON
MAIN_FLT
+12V_MAIN
TP50
WIRE LOOP
DNP
R193
000
TP1
R12
110K
R13
5K9
R14
8K66
C89
0.1uF
16V
C88
1uF
25V
D5
15V
5W
R51
110K
R53
110K
R11
15K0
R10
12K1
R52
41K2
R15
23K2
TP2
+12V
C90
1uF
25V
C84
100uF
25V
D8
14V
GND
I_Inrush = 15 mA / 98 mS (C89)
I_LIM = 3.85A (R15) / T_FAULT = 4 mS
V_IMON = 3.0V @ I_LOAD = 3.84A (R11)
PGOOD = High @ V_OUT = 10.0 V
R196
000
Pre-Regulator (+5V)
U62
TPS62153
PVIN1
PVIN2
AVIN
SS/TR
EN
DEF
AGND
EP
SW1
SW2
SW3
PG
VOS
FSW
FB
PGND1
PGND2
I_SS_Pk = 0.35A
C108
3.3uF
25V
C109
3.3uF
25V
C107
3.3uF
25V
R135
DNP
R142
000
C129
22nF
25V
MAIN_P
L10
2.2uH
3.9A
R118
100K
R219
DNP
R224
000
C117
22uF
16V
I_SS_Pk = 0.75A
R201
000
5V_PSW
TP8
I_switch = 1.25 MHz
T_start_delay = 50 uS
Prog Soft-Start (C129):
Soft-Start = 11 mS / I_soft-start = 10 mA
Dual DC/DC Converter
(+3.3V Digital / +3.3V Analog)
U53
TPS62410
EN1
EN2
VIN
MODE/DATA
R85
000
FB1
SW1
DEF_1
SW2
ADJ2
GND
EP
3V3A_IND2
3V3A_IND1
L8
4.7uH
890mA
VDEF_1 = 0.6V
R184
453K
R182
100K
C119
10uF
6.3V
L11
150nH
3V3A_IND3
R199
000
+3V3_A
TP4
C96
100nF
50V
I_SS_Pk = 0.5A @ 3.3V
(Analog)
3V3_IND1
L6
2.2uH
950mA
3V3_IND2
R183
453K
C120
33pF
25V
R181
100K
VADJ2 = 0.6V
C118
10uF
6.3V
R198
000
+3V3
TP10
I_SS_Pk = 0.5A @ 3.3V
(Digital)
LDO Regulator (+3.3V)
250mW
2K49
R178
3.3V_LDO
R177
39K
U39
ATL431
VREF = 2.5V
R174
121K
R107
1K58
C9
DNP
Sequencer
TP9
R88
100K
R141
000
C7
100nF
MAIN_PG
U54
LM3880MF-1AC
VCC
EN
GND
FLAG1
FLAG2
FLAG3
R213
100K
R214
100K
R215
100K
Start-Up Sequence:
EN High
60 mS --> 5V_EN
60 mS --> 3V3A_EN
60 mS --> 3V3D_EN
Shut-down: Reverse order