[LED BACKLIGHT 24V DC]

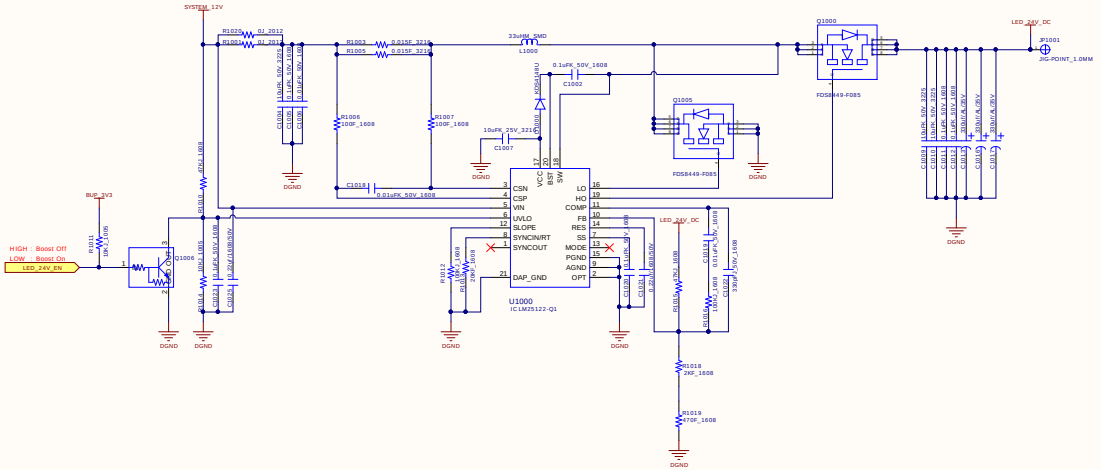

Title	
Size: A2	Revision:
Date: 2020-08-12	Sheet of

DIGEN