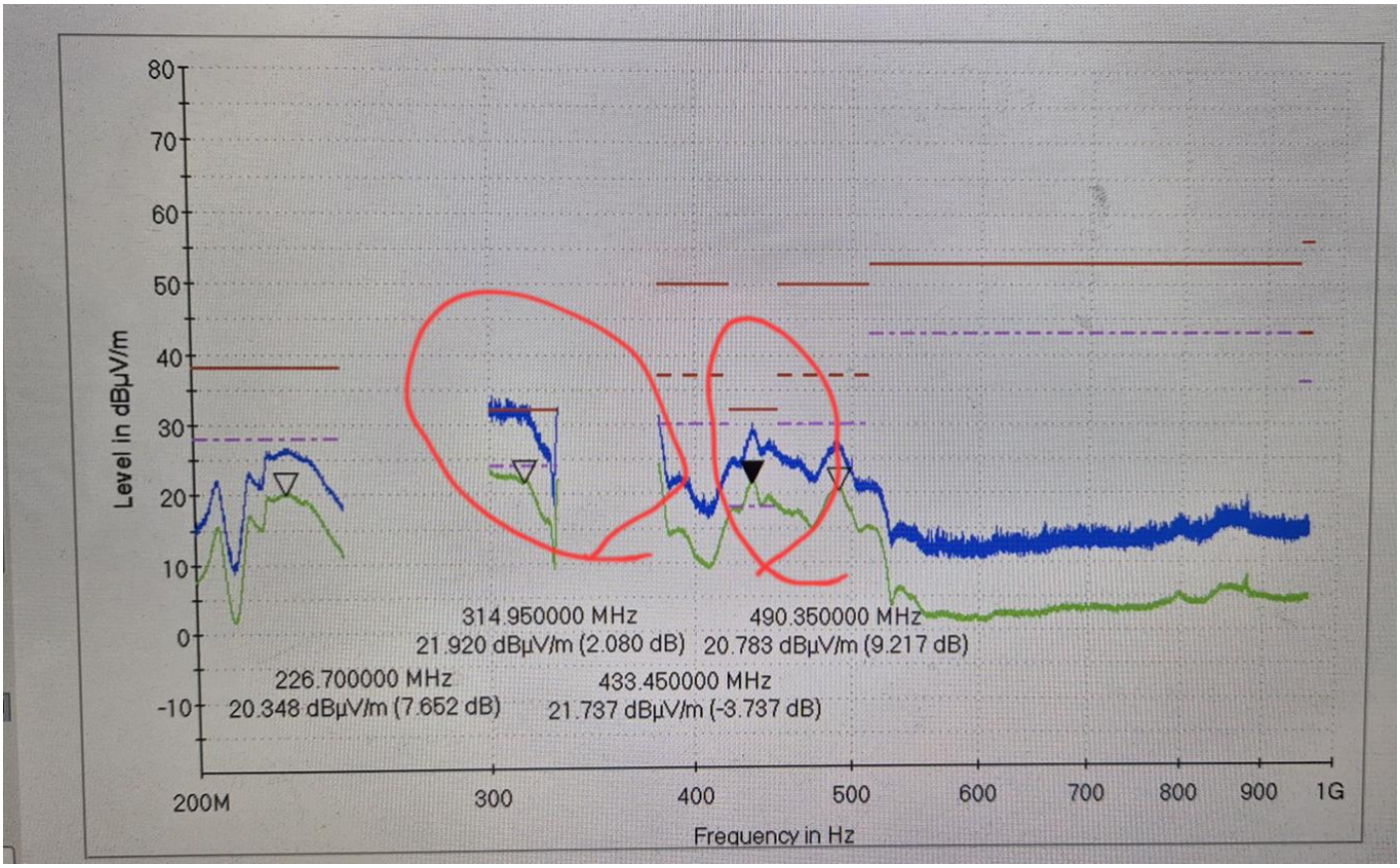
Level in dBµV/m
80
70
60
50
40
30
20
10
0
-10
314.950000 MHz
21.920 dBµV/m (2.080 dB)
490.350000 MHz
20.783 dBµV/m (9.217 dB)
226.700000 MHz
20.348 dBµV/m (7.652 dB)
433.450000 MHz
21.737 dBµV/m (-3.737 dB)
200M
300
400
500
600
700
800
900
1G
Frequency in Hz

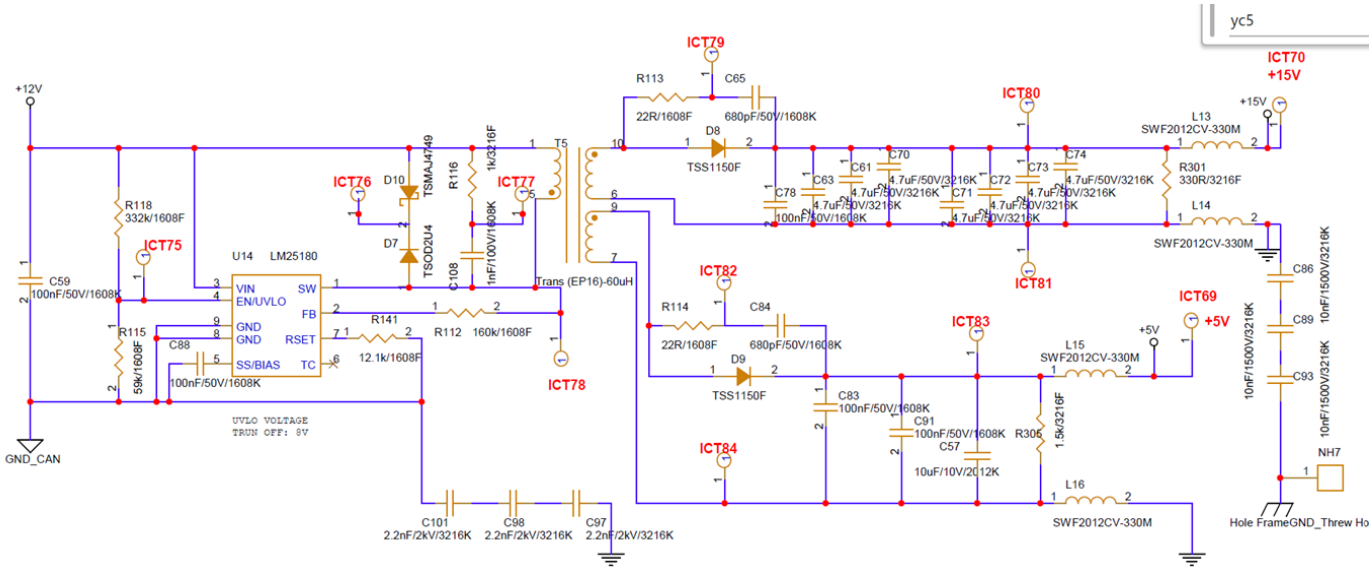
yc5
+12V
GND_CAN
ICT75
ICT76
ICT77
ICT78
ICT79
ICT80
ICT81
ICT82
ICT83
ICT84
ICT69
+5V
ICT70
+15V
U14 LM25180
VIN
EN/UVLO
GND
GND
SS/BIAS
SW
FB
RSET
TC
UVLO VOLTAGE
TRUN OFF: 8V
R118
332k/1608F
R115
59k/1608F
C59
100nF/50V/1608K
C88
100nF/50V/1608K
R141
12.1k/1608F
R112
160k/1608F
D10
TSMAJ4749
D7
TSOD2U4
R116
1k/3216F
C108
1nF/100V/1608K
T5
Trans (EP16)-60uH
C101
2.2nF/2kV/3216K
C98
2.2nF/2kV/3216K
C97
2.2nF/2kV/3216K
R113
22R/1608F
C65
680pF/50V/1608K
D8
TSS1150F
R114
22R/1608F
C84
680pF/50V/1608K
D9
TSS1150F
C78
100nF/50V/1608K
C63
4.7uF/50V/3216K
C61
4.7uF/50V/3216K
C70
4.7uF/50V/3216K
C71
4.7uF/50V/3216K
C72
4.7uF/50V/3216K
C73
4.7uF/50V/3216K
C74
4.7uF/50V/3216K
L13
SWF2012CV-330M
R301
330R/3216F
L14
SWF2012CV-330M
L15
SWF2012CV-330M
L16
SWF2012CV-330M
C83
100nF/50V/1608K
C91
100nF/50V/1608K
C57
10uF/10V/2012K
R306
1.5k/3216F
C86
10nF/1500V/3216K
C89
10nF/1500V/3216K
C93
10nF/1500V/3216K
NH7
Hole FrameGND_Threw Ho