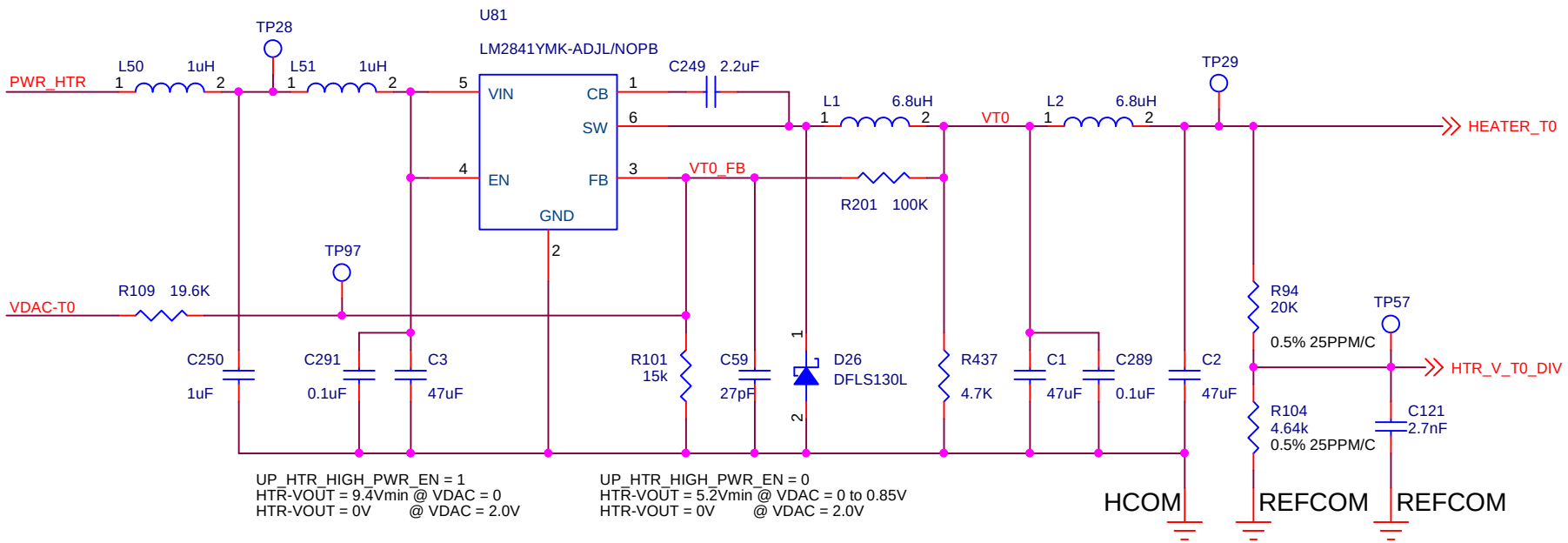
U81
LM2841YMK-ADJL/NOPB
VIN
CB
SW
EN
FB
GND
PWR_HTR
L50 1uH
TP28
L51 1uH
C249 2.2uF
L1 6.8uH
VT0
L2 6.8uH
TP29
HEATER_T0
VT0_FB
R201 100K
TP97
VDAC-T0
R109 19.6K
C250 1uF
C291 0.1uF
C3 47uF
R101 15k
C59 27pF
D26 DFLS130L
R437 4.7K
C1 47uF
C289 0.1uF
C2 47uF
R94 20K
0.5% 25PPM/C
TP57
HTR_V_T0_DIV
R104 4.64k
0.5% 25PPM/C
C121 2.7nF
UP_HTR_HIGH_PWR_EN = 1
HTR-VOUT = 9.4Vmin @ VDAC = 0
HTR-VOUT = 0V @ VDAC = 2.0V
UP_HTR_HIGH_PWR_EN = 0
HTR-VOUT = 5.2Vmin @ VDAC = 0 to 0.85V
HTR-VOUT = 0V @ VDAC = 2.0V
HCOM
REFCOM
REFCOM