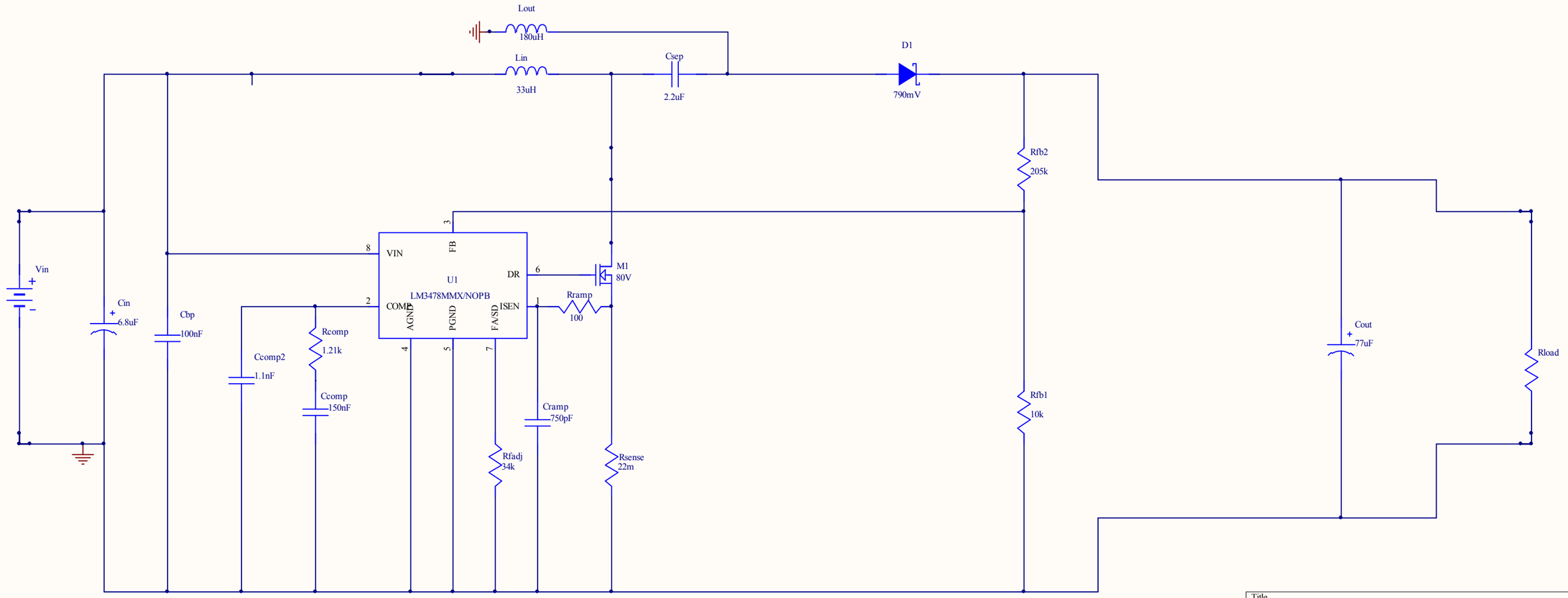

Title		
Size A	Number	Revision
Date: 08.06.2017		Sheet of
File: C:\Users\..\2017-06-08_04-34-061.schdoc		Drawn By: