Camera

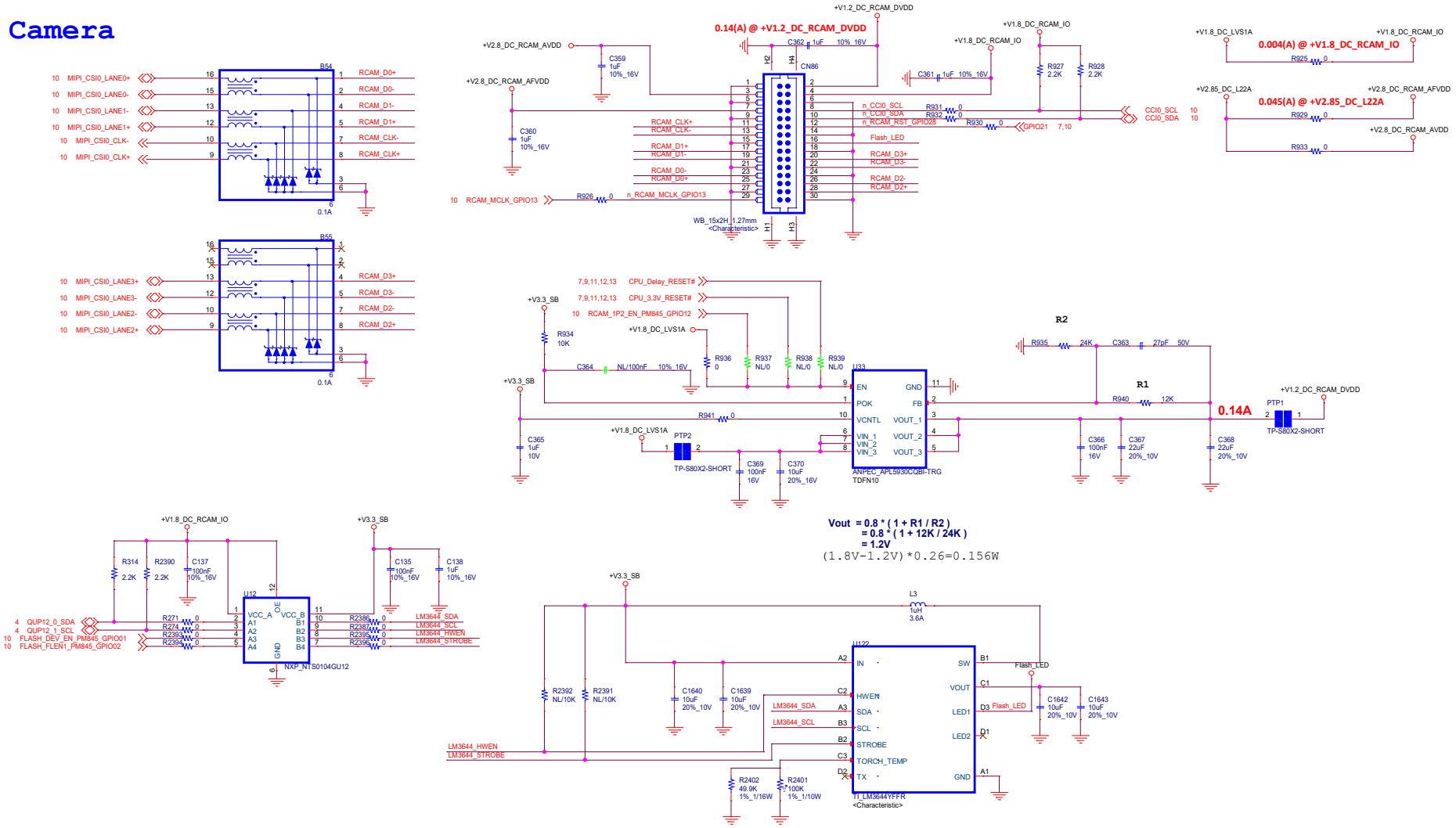
B54
10 MIPI_CSI0_LANE0+ 16 1 RCAM_D0+
10 MIPI_CSI0_LANE0- 15 2 RCAM_D0-
10 MIPI_CSI0_LANE1- 13 4 RCAM_D1-
10 MIPI_CSI0_LANE1+ 12 5 RCAM_D1+
10 MIPI_CSI0_CLK- 10 7 RCAM_CLK-
10 MIPI_CSI0_CLK+ 9 8 RCAM_CLK+
0.1A
B55
10 MIPI_CSI0_LANE3+ 13 4 RCAM_D3+
10 MIPI_CSI0_LANE3- 12 5 RCAM_D3-
10 MIPI_CSI0_LANE2- 10 7 RCAM_D2-
10 MIPI_CSI0_LANE2+ 9 8 RCAM_D2+
0.1A
+V1.2_DC_RCAM_DVDD
0.14(A) @ +V1.2_DC_RCAM_DVDD
+V2.8_DC_RCAM_AVDD
C359 1uF 10%_16V
C362 1uF 10%_16V
+V1.8_DC_RCAM_IO
C361 1uF 10%_16V
R927 2.2K
R928 2.2K
+V2.8_DC_RCAM_AFVDD
C360 1uF 10%_16V
CN86
n_CCI0_SCL
n_CCI0_SDA
n_RCAM_RST_GPIO28
R931 0
R932 0
R930 0
GPIO21 7,10
CCI0_SCL 10
CCI0_SDA 10
RCAM_CLK+
RCAM_CLK-
RCAM_D1+
RCAM_D1-
RCAM_D0-
RCAM_D0+
Flash_LED
RCAM_D3+
RCAM_D3-
RCAM_D2-
RCAM_D2+
10 RCAM_MCLK_GPIO13
R926 0
n_RCAM_MCLK_GPIO13
WB_15x2H_1.27mm
<Characteristic>
H1 H2 H3 H4
+V1.8_DC_LVS1A
+V1.8_DC_RCAM_IO
0.004(A) @ +V1.8_DC_RCAM_IO
R925 0
+V2.85_DC_L22A
+V2.8_DC_RCAM_AFVDD
0.045(A) @ +V2.85_DC_L22A
R929 0
R933 0
7,9,11,12,13 CPU_Delay_RESET#
7,9,11,12,13 CPU_3.3V_RESET#
10 RCAM_1P2_EN_PM845_GPIO12
+V3.3_SB
R934 10K
+V1.8_DC_LVS1A
R936 0
R937 NL/0
R938 NL/0
R939 NL/0
C364 NL/100nF 10%_16V
R941 0
C365 1uF 10V
+V1.8_DC_LVS1A
PTP2
TP-S80X2-SHORT
C369 100nF 16V
C370 10uF 20%_16V
U33
EN
POK
VCNTL
VIN_1
VIN_2
VIN_3
GND
FB
VOUT_1
VOUT_2
VOUT_3
ANPEC_APL5930CQBI-TRG
TDFN10
R2
R935 24K
C363 27pF 50V
R1
R940 12K
0.14A
PTP1
TP-S80X2-SHORT
+V1.2_DC_RCAM_DVDD
C366 100nF 16V
C367 22uF 20%_10V
C368 22uF 20%_10V
+V1.8_DC_RCAM_IO
+V3.3_SB
R314 2.2K
R2390 2.2K
C137 100nF 10%_16V
C135 100nF 10%_16V
C138 1uF 10%_16V
U12
VCC_A
A1
A2
A3
A4
OE
GND
VCC_B
B1
B2
B3
B4
NXP_NTS0104GU12
4 QUP12_0_SDA
4 QUP12_1_SCL
10 FLASH_DEV_EN_PM845_GPIO01
10 FLASH_FLEN1_PM845_GPIO02
R271 0
R274 0
R2393 0
R2394 0
R2386 0
R2387 0
R2397 0
R2398 0
LM3644_SDA
LM3644_SCL
LM3644_HWEN
LM3644_STROBE
Vout = 0.8 * (1 + R1 / R2)
= 0.8 * (1 + 12K / 24K)
= 1.2V
(1.8V-1.2V)*0.26=0.156W
+V3.3_SB
L3 1uH 3.6A
U122
IN
HWEN
SDA
SCL
STROBE
TORCH_TEMP
TX
SW
VOUT
LED1
LED2
GND
TI_LM3644YFFR
<Characteristic>
R2392 NL/10K
R2391 NL/10K
C1640 10uF 20%_10V
C1639 10uF 20%_10V
LM3644_SDA
LM3644_SCL
LM3644_HWEN
LM3644_STROBE
Flash_LED
C1642 10uF 20%_10V
C1643 10uF 20%_10V
R2402 49.9K 1%_1/16W
R2401 100K 1%_1/10W