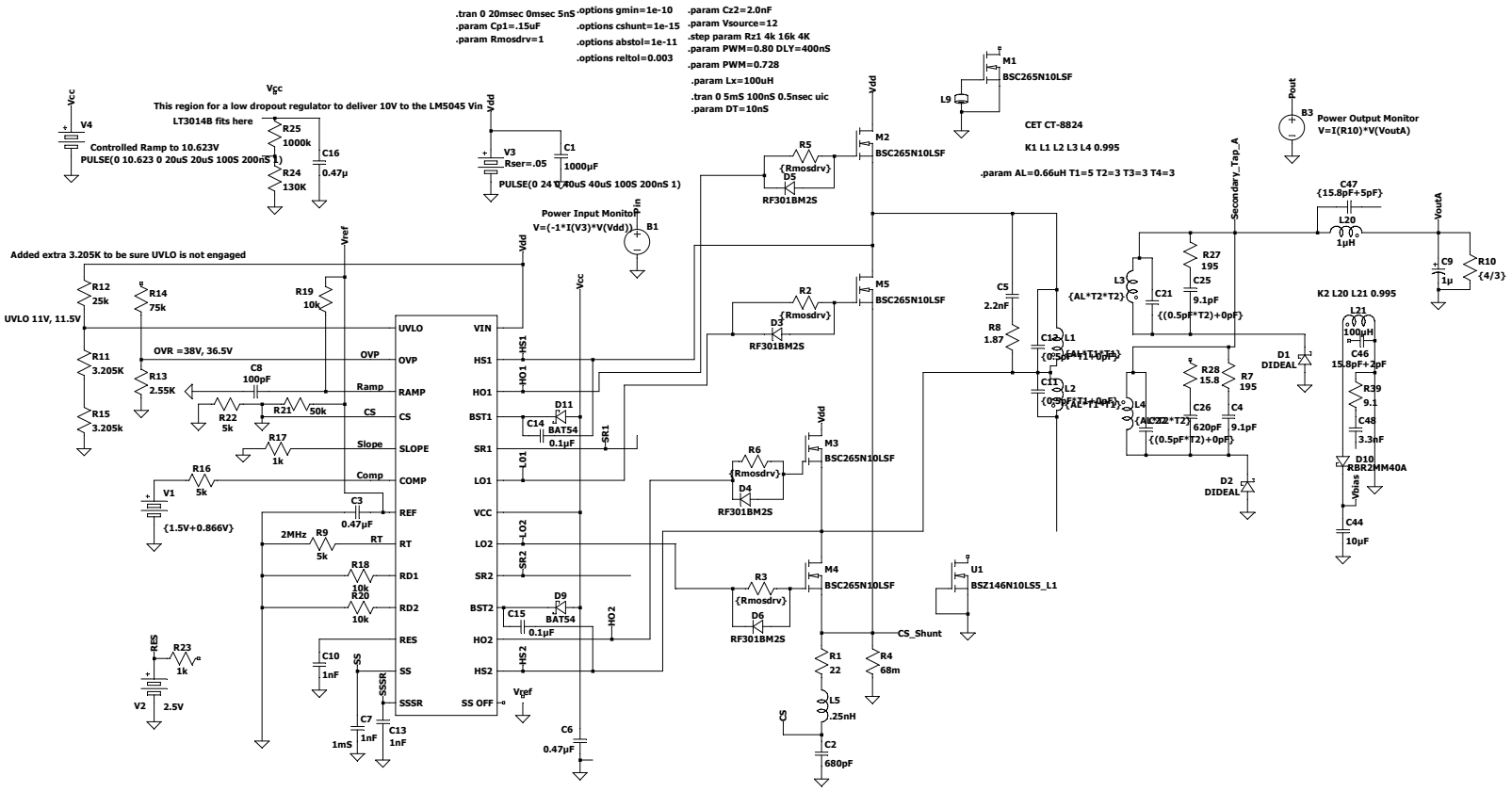

--- C:\LT Spice Simulations\Accellent Mains LM5045 Full Bridge v1.asc ---