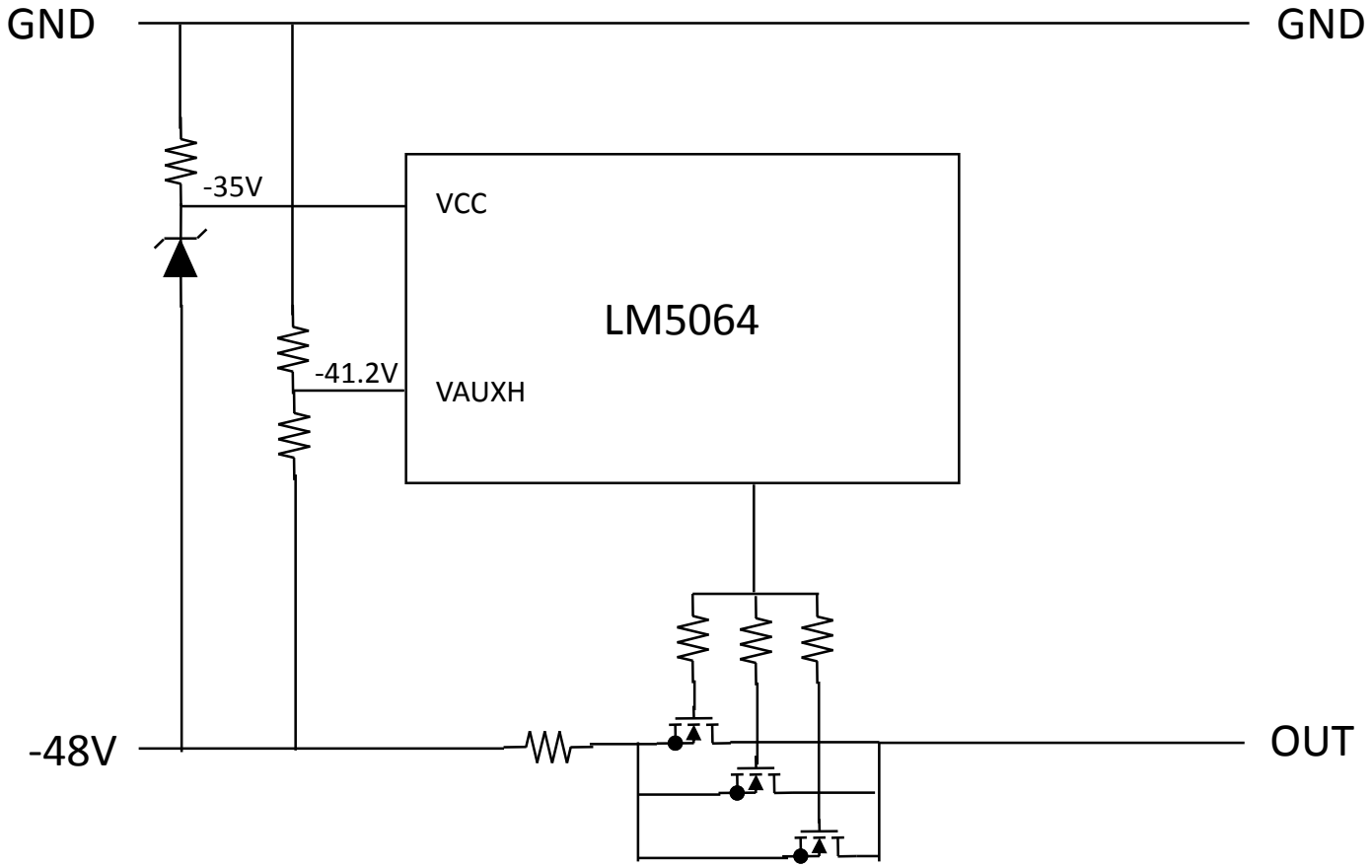
GND
GND
-35V
VCC
LM5064
-41.2V
VAUXH
-48V
OUT