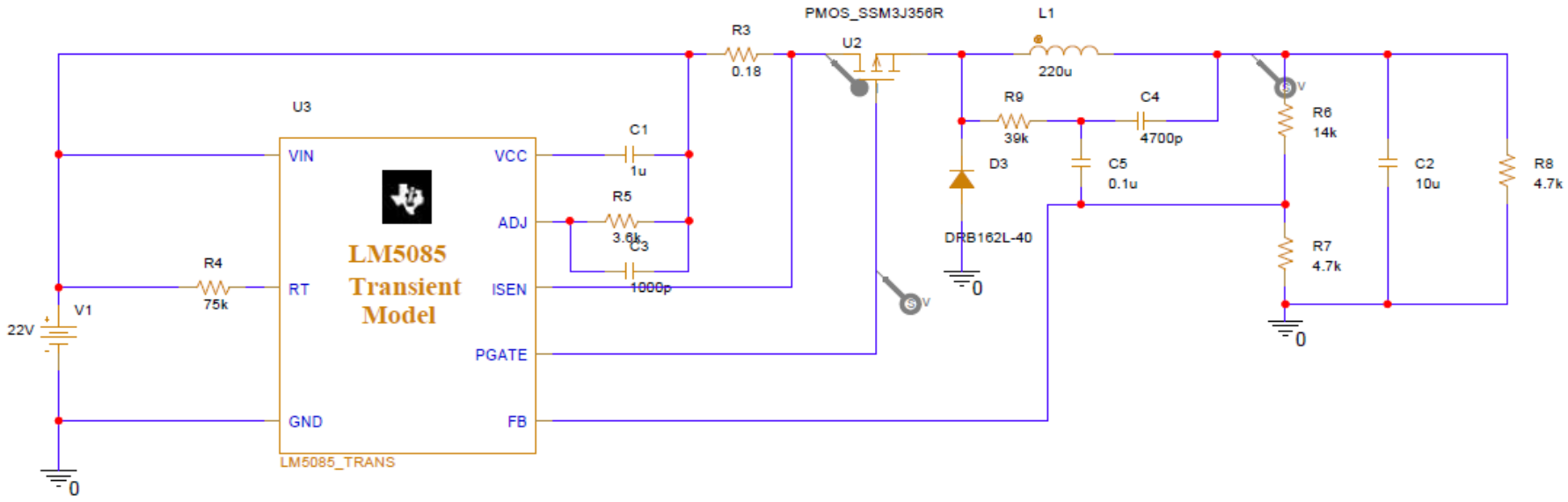
PMOS_SSM3J356R
L1
R3
0.18
U2
220u
U3
R9
39k
C4
4700p
R6
14k
C1
1u
VIN
VCC
D3
C5
0.1u
C2
10u
R8
4.7k
R5
3.6k
ADJ
C3
1000p
DRB162L-40
R7
4.7k
R4
75k
RT
ISEN
LM5085
Transient
Model
V1
22V
PGATE
GND
FB
LM5085_TRANS
0
0
0