CAD MAINTAINED. CHANGES SHALL BE INCORPORATED BY THE CURRENT DESIGN ACTIVITY				
REVISION HISTORY - ALL SHEETS ARE THE SAME REVISION				
ZONE	REV	DESCRIPTION	DATE	APPROVED
Add	Add Revision Block Zone	Add Revision Block Rev	Add Revision Block Date	Add Revision Block Ap

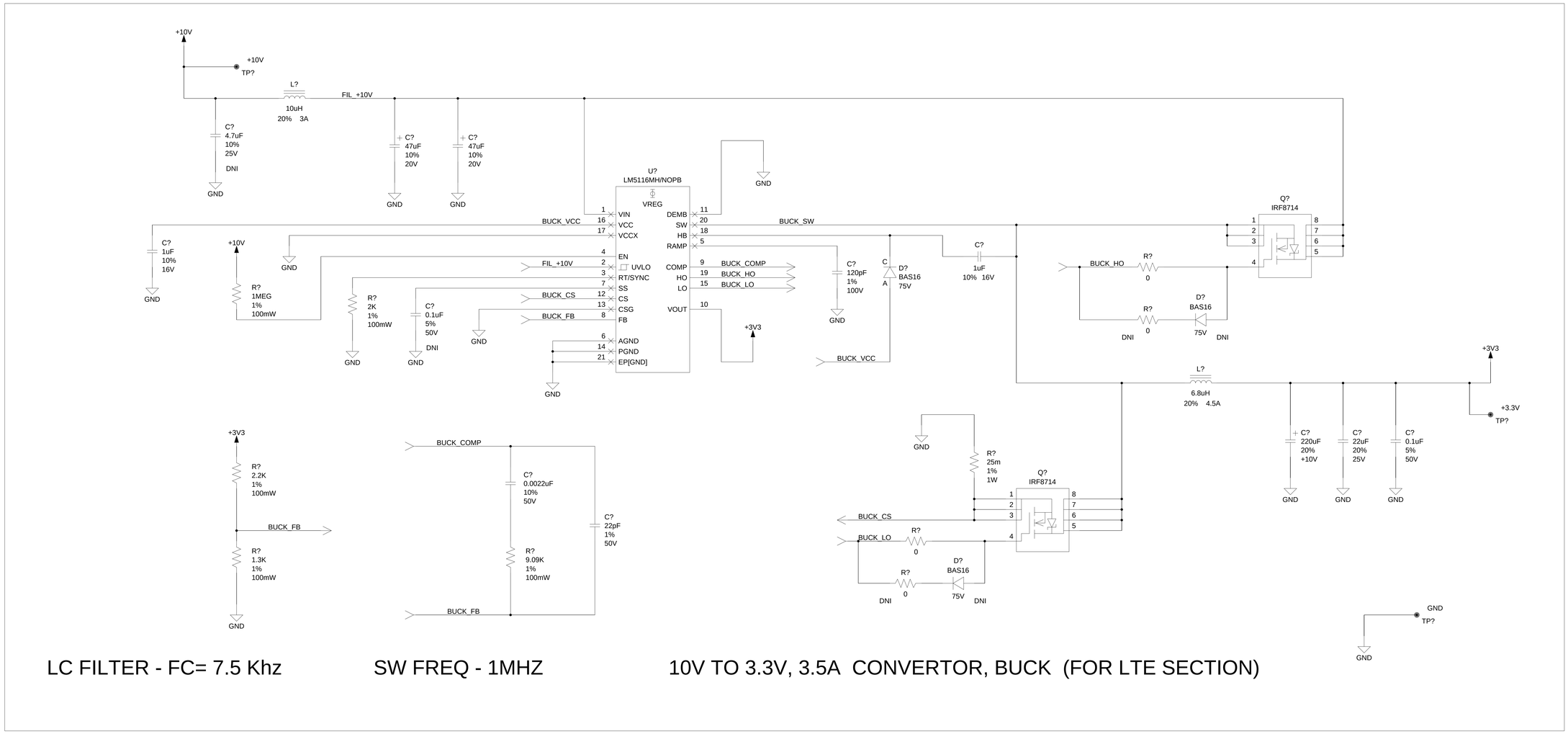

LC FILTER - FC= 7.5 Khz

SW FREQ - 1MHZ

10V TO 3.3V, 3.5A CONVERTOR, BUCK (FOR LTE SECTION)

NOTES

UNLESS OTHERWISE SPECIFIED:

1. INTERPRET DRAWING PER ASME Y14.100-2004.
2. PARTIAL REFERENCE DESIGNATIONS ARE SHOWN:
   FOR COMPLETE DESIGNATION PREFIX WITH UNIT NUMBER, ASSEMBLY DESIGNATIONS AND SUBASSEMBLY DESIGNATIONS.
3. RESISTOR VALUES ARE GIVEN IN OHMS.
4. CAPACITOR VALUES ARE GIVEN IN MICRO FARADS.
5. NOT-INSTALLED COMPONENTS ARE SHOWN FOR REFERENCE ONLY.

US GOVERNMENT DATA RIGHTS
Select or Add GOV DATA RIGHTS
HONEYWELL DATA RIGHTS
Select or Add HON DATA RIGHTS
Select or Add Honeywell Confidential or Proprietary
THIS COPYRIGHTED WORK AND ALL INFORMATION ARE THE PROPERTY OF HONEYWELL, CONTAIN TRADE SECRETS AND MAY NOT, IN WHOLE OR IN PART, BE USED, DUPLICATED, OR DISCLOSED FOR ANY PURPOSE WITHOUT PRIOR WRITTEN PERMISSION OF HONEYWELL. ALL RIGHTS RESERVED.

Add NEXT ASSY Number | Add USED ON Number

NEXT ASSY	USED ON
INITIAL APPLICATION	

SIMILAR PART NO: NA
PROGRAM: NA
MA WORK ORD/EWO/NETWORK ACTIVITY NO: NA
SALES ORDER NUMBER: NA
THIRD ANGLE PROJECTION

DRAWING START DATE	Add Drawing Start Date
PREPARER Add DRAWN BY Name	Add DRAWN BY Date
CHECKER Add CHECKER Name	Add CHECKER Date
EE Add EE Name	Add EE Date
ENG MGT Add ENG MGT Name	Add ENG MGT Date
QA Add QA Name	Add QA Date

ELECTRONIC APPROVALS
INITIAL RELEASE:Select or Add Initial Release
ALL APPROVALS CONTROLLED BY THE PRODUCT DATA MANAGEMENT SYSTEM
CONTRACT NUMBER
Add CONTRACT NUMBER

HONEYWELL INTERNATIONAL INC.
AEROSPACE - Select or Add CITY,STATE USA
Honeywell

Add DRAWING TITLE LINE 1
Add DRAWING TITLE LINE 2
SCHEMATIC DIAGRAM

SIZE	CAGE CODE	DWG NO	REV
E	Select Add CAGE CODE	Add Drawing Number	Add Drawing Rev

SCALE: NONE WT: NA

AP-1302 05-22

DxDESIGNER 12/01/2017:16:32