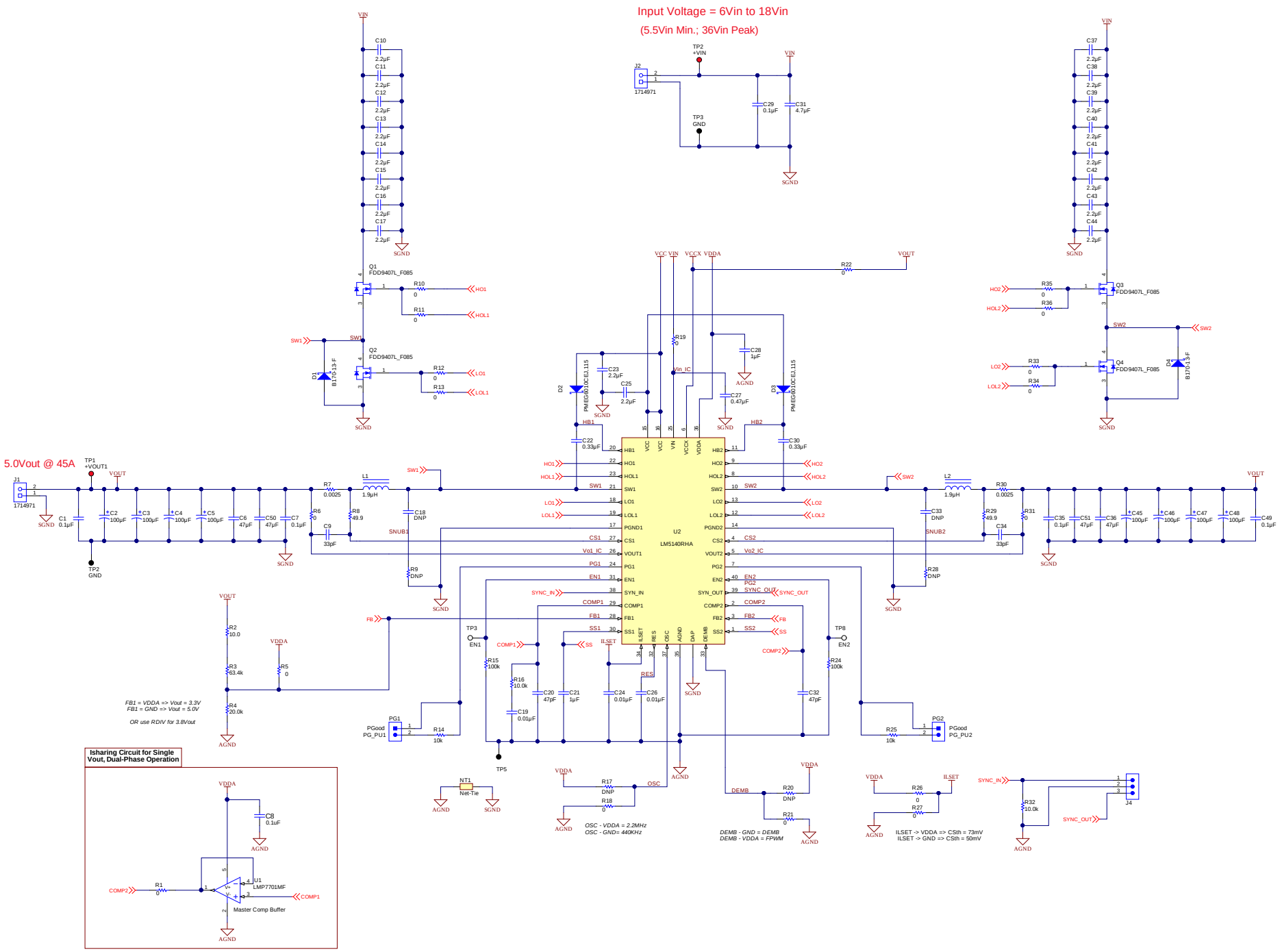

Orderable: EVM_orderable	Designed for: PRJ_Customer	Mod. Date: 1/13/2017	
TID #: TID	Project Title: PRJ_Title		
Number: PRJ_Number Rev: SCH	Sheet Title: Schematic		
SVN Rev: Version control disabled	Assembly Variant: [No Variations]	Sheet: 1 of 2	
Drawn By:	File: LM5140DUALP-rE1.SchDoc	Size: C	
Engineer: PRJ_Engineer	Contact: TechSupport		

Texas Instruments and/or its licensors do not warrant the accuracy or completeness of this specification or any information contained therein. Texas Instruments and/or its licensors do not warrant that this design will meet the specifications, will be suitable for your application or fit for any particular purpose, or will operate in an implementation. Texas Instruments and/or its licensors do not warrant that the design is production worthy. You should completely validate and test your design implementation to confirm the system functionality for your application.

© Texas Instruments, Copyright Year