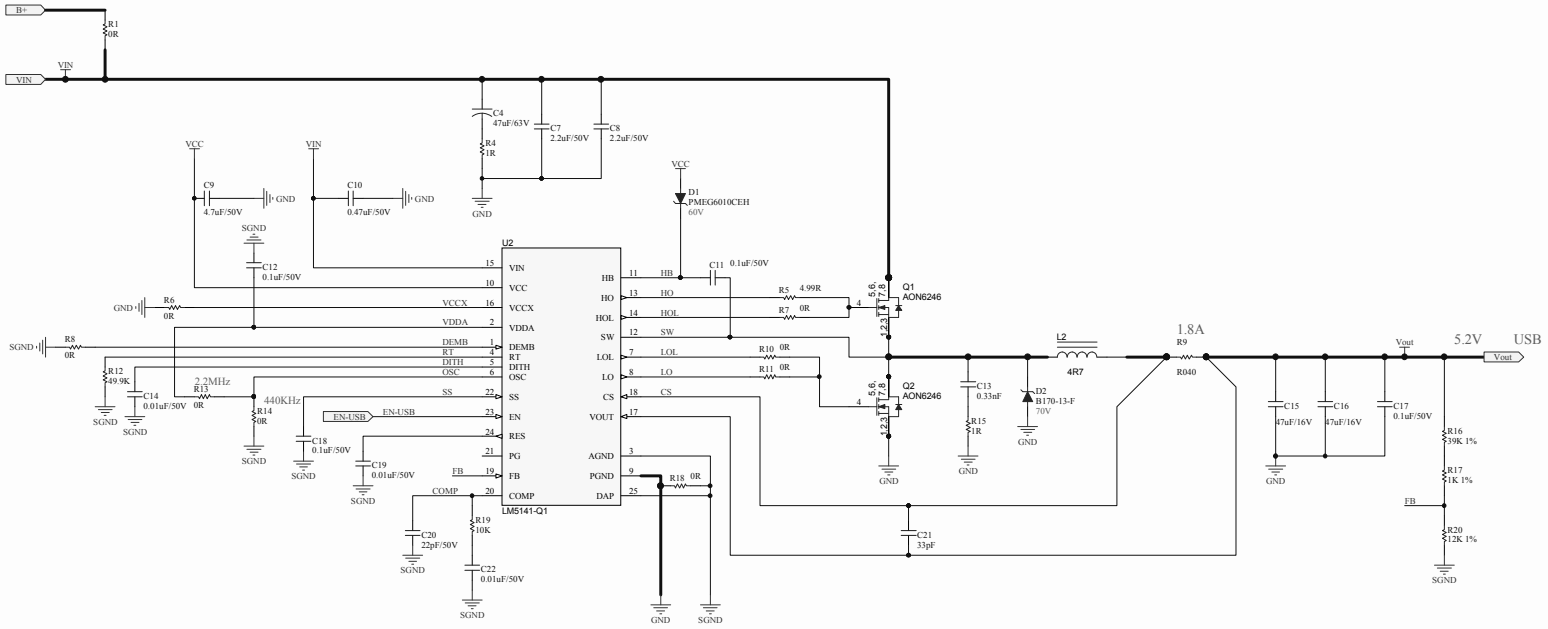

Title			Altium Limited L3, 12a Rodborough Rd Frenchs Forest NSW Australia 2086
Size: A3	Number:	Revision:	
Date: 2018/9/14	Time: 20:44:55	Sheet of	
File: F:\CBT项目\KB3612\KB3612-A\DC-DC.SchDoc			