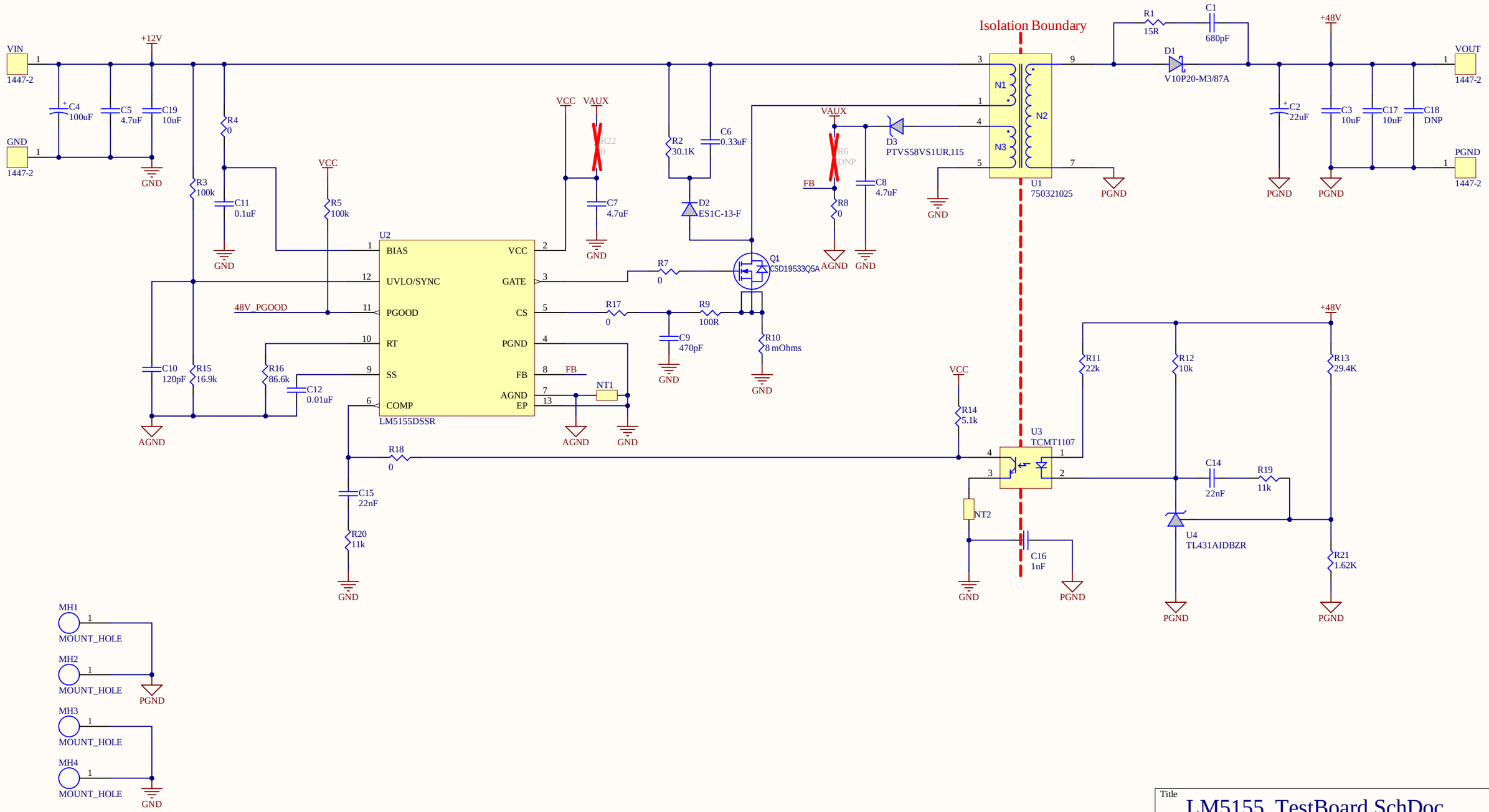

Title	LM5155_TestBoard.SchDoc	
Size: A3	Number: LM5155_TestBoard	Revision: B
Date: 9-17-2024		Sheet of *
File: C:\Users\..\LM5155_TestBoard.SchDoc		Drawn By: