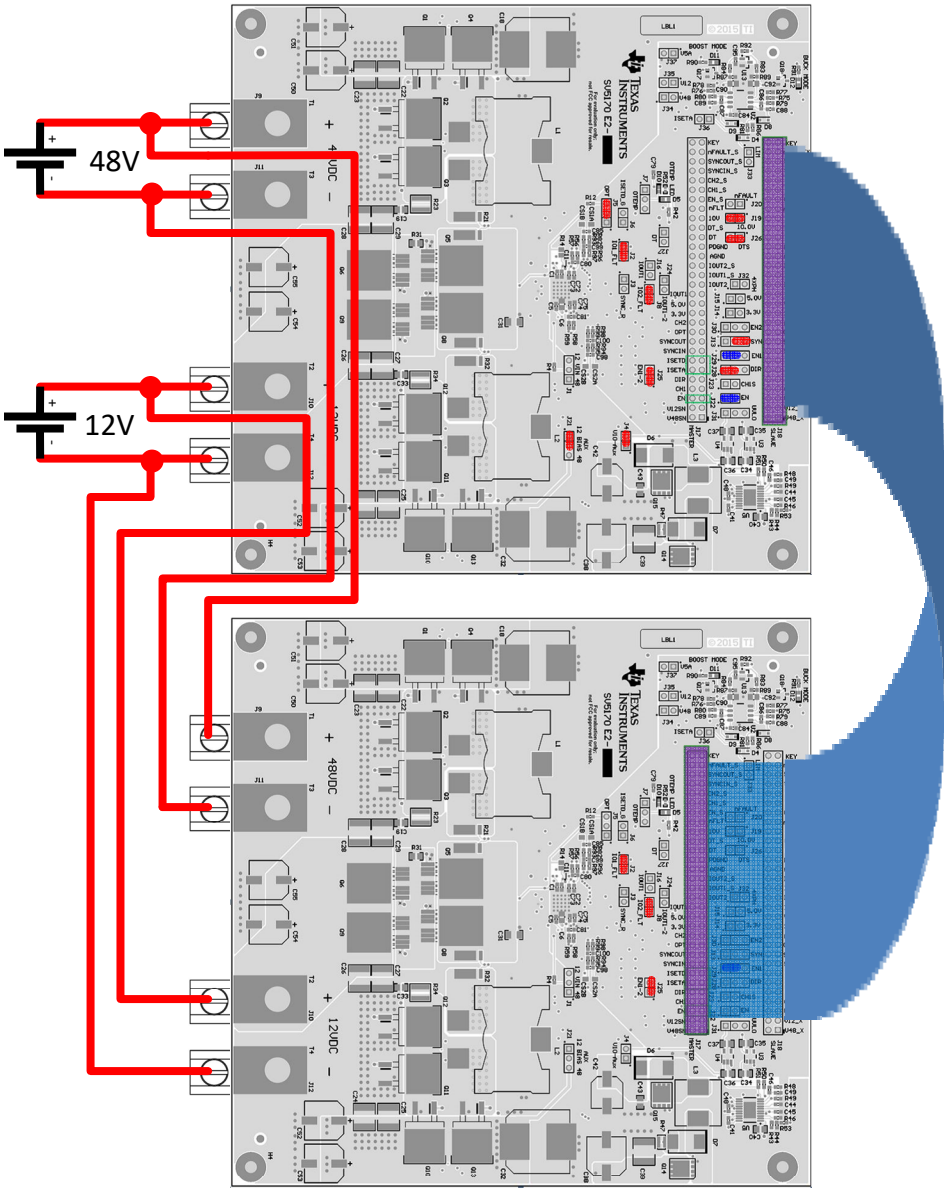
48V
12V
48VDC
12VDC
48VDC
12VDC

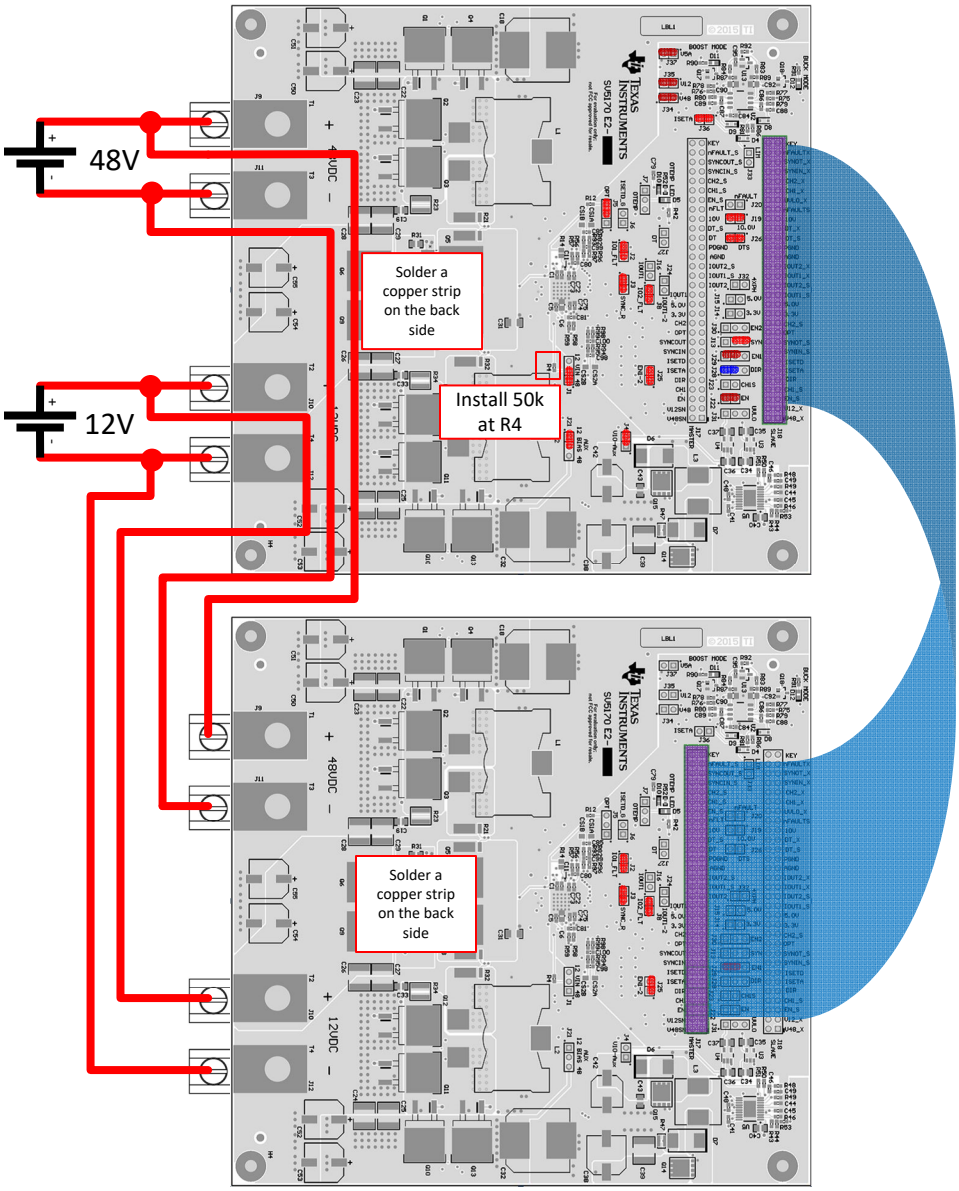
48V
12V
Solder a copper strip on the back side
Install 50k at R4
Solder a copper strip on the back side

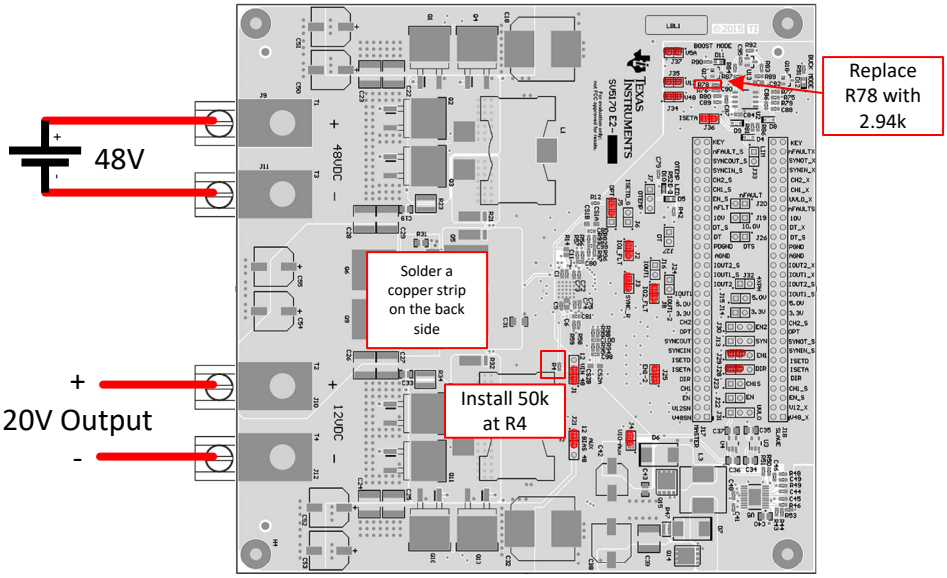
48V
+
20V Output
-
Solder a copper strip on the back side
Install 50k at R4
Replace R78 with 2.94k

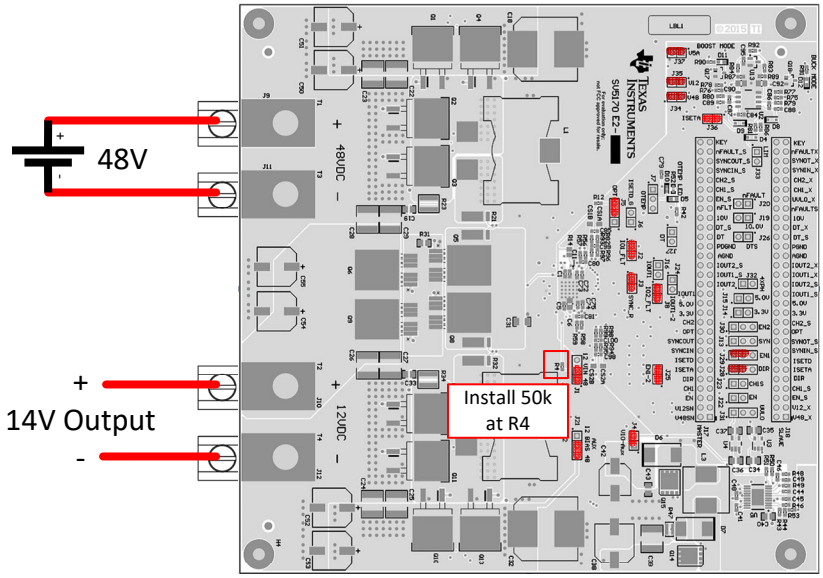
48V
+
-
+
14V Output
-
Install 50k
at R4

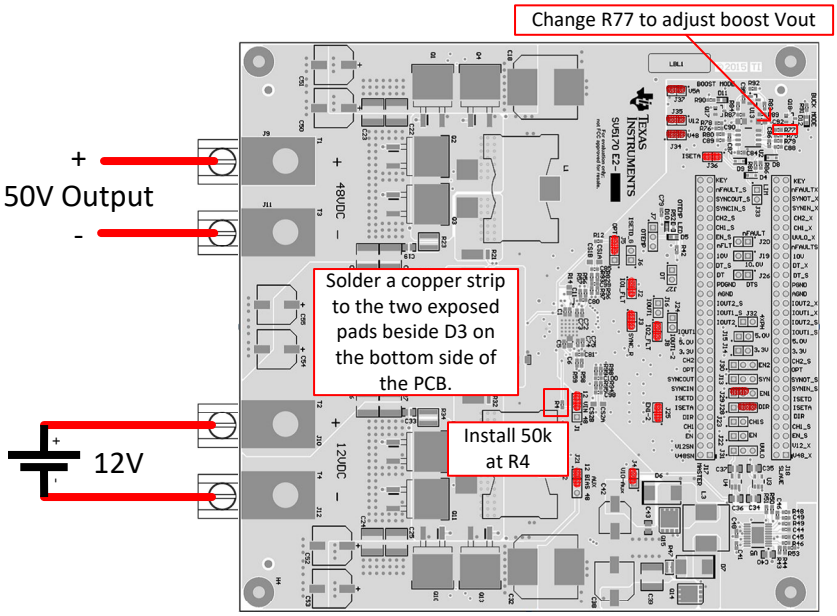
Change R77 to adjust boost Vout
+
50V Output
-
Solder a copper strip to the two exposed pads beside D3 on the bottom side of the PCB.
Install 50k at R4
12V