Buck-Boost for USB-C1

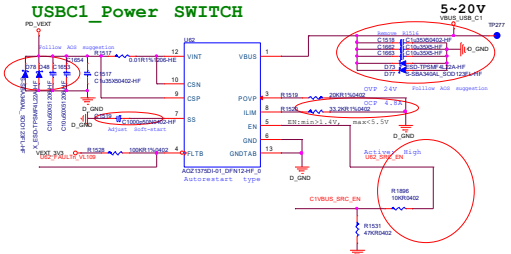

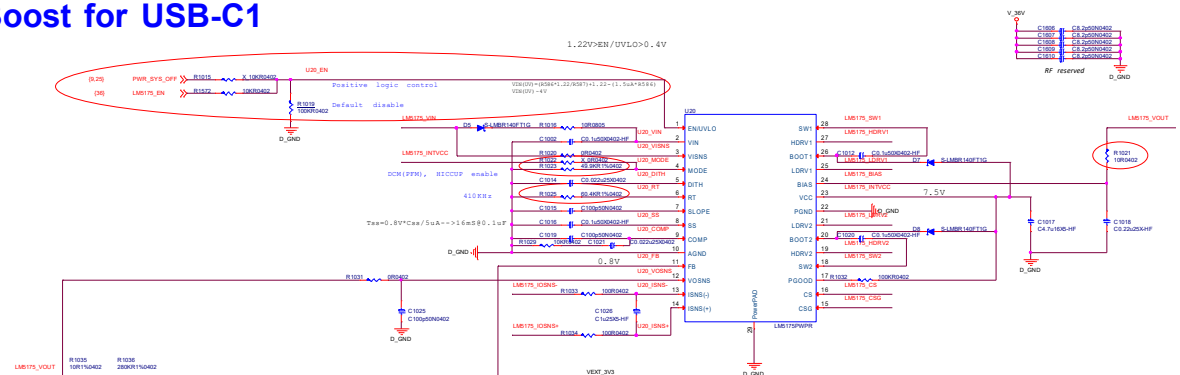

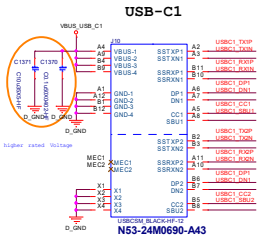

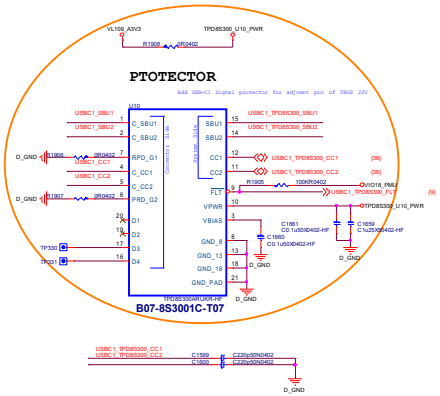

Buck_boost_SEL0	Buck_boost_SEL1	VOUT	
0	0	5V	5.08V
0	1	9V	9.0687V
1	0	15V	14.995V
1	1	20V	20.05V

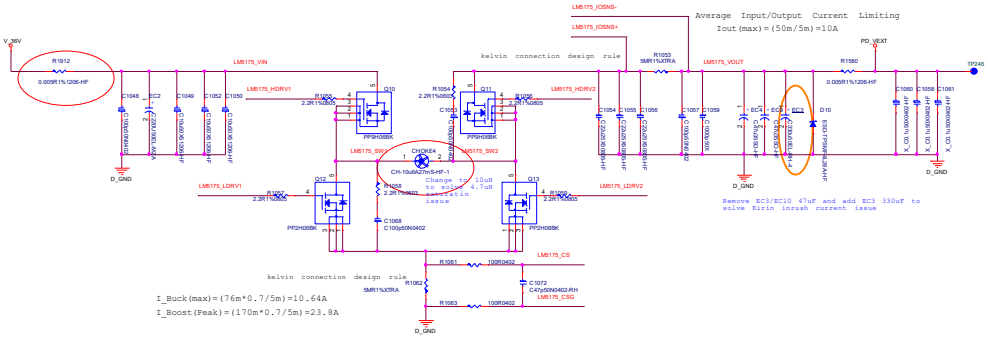

msi	Micro-Star International Co., LTD.	
	MS-55781	
Size: D	Document Number: Buck-Boost&RTC	Rev: 0B
Date: Thursday, January 02, 2025	Sheet 25 of 30	