DC IN 9-36V

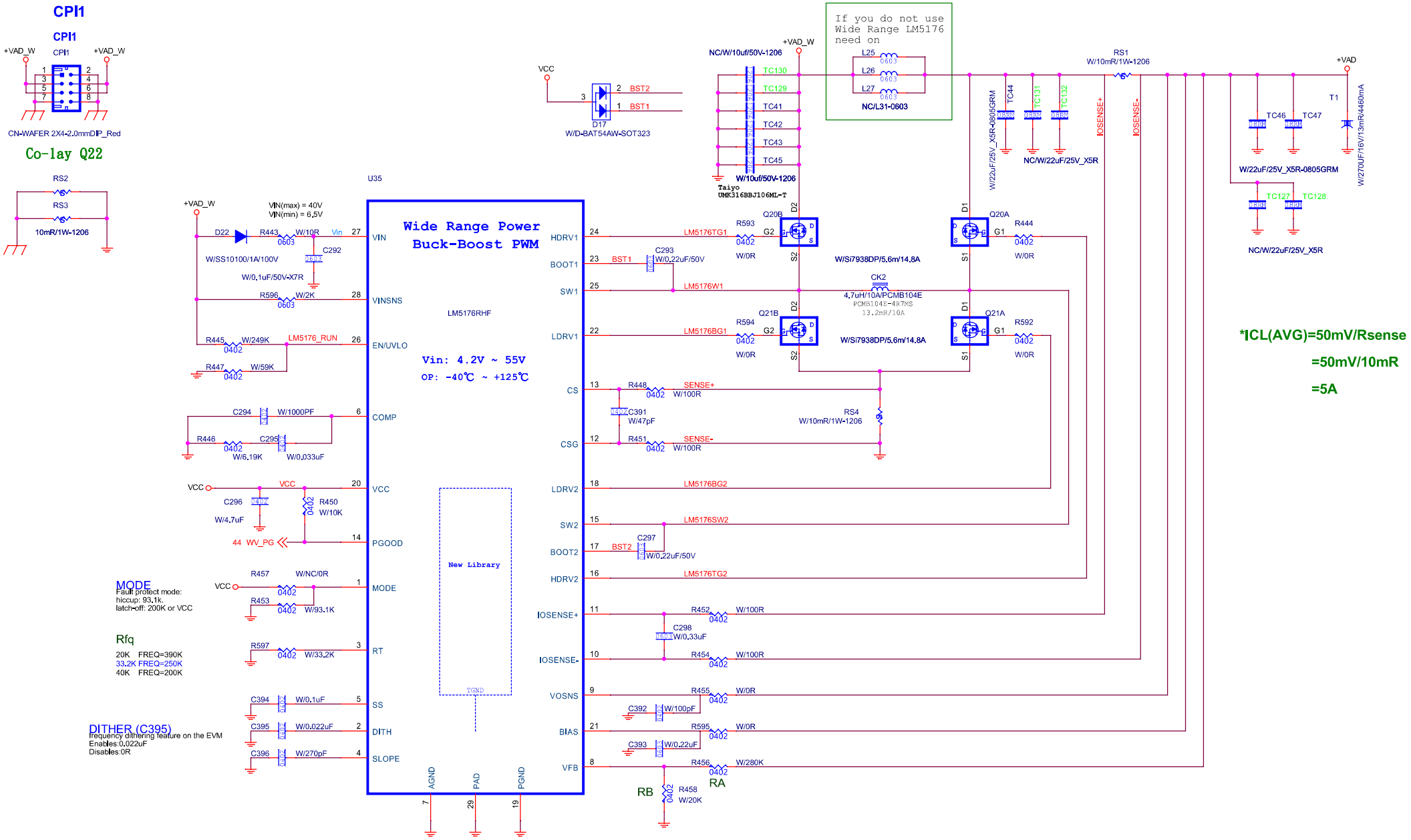

Vout 12V , RA=280K , RB=20K

RA = (Vout-0.8)/0.8*RB